AVT Manta

Technical Manual

AVT GigE Vision Cameras

V4.1.0

24 June 2011

Allied Vision Technologies GmbH
Taschenweg 2a
D-07646 Stadtroda / Germany

ALLIED Vision Technologies

Legal notice

For customers in the U.S.A.

This equipment has been tested and found to comply with the limits for a Class B digital device, pursuant to Part 15 of the FCC Rules. These limits are designed to provide reasonable protection against harmful interference when the equipment is operated in a residential environment. This equipment generates, uses, and can radiate radio frequency energy and, if not installed and used in accordance with the instruction manual, may cause harmful interference to radio communications. However there is no guarantee that interferences will not occur in a particular installation. If the equipment does cause harmful interference to radio or television reception, the user is encouraged to try to correct the interference by one or more of the following measures:

- Reorient or relocate the receiving antenna.
- Increase the distance between the equipment and the receiver.
- Use a different line outlet for the receiver.
- Consult a radio or TV technician for help.

You are cautioned that any changes or modifications not expressly approved in this manual could void your authority to operate this equipment. The shielded interface cable recommended in this manual must be used with this equipment in order to comply with the limits for a computing device pursuant to Subpart B of Part 15 of FCC Rules.

For customers in Canada

This apparatus complies with the Class B limits for radio noise emissions set out in the Radio Interference Regulations.

Pour utilisateurs au Canada

Cet appareil est conforme aux normes classe B pour bruits radioélectriques, spécifiées dans le Règlement sur le brouillage radioélectrique.

Life support applications

These products are not designed for use in life support appliances, devices, or systems where malfunction of these products can reasonably be expected to result in personal injury. Allied Vision Technologies customers using or selling these products for use in such applications do so at their own risk and agree to fully indemnify Allied for any damages resulting from such improper use or sale.

Trademarks

Unless stated otherwise, all trademarks appearing in this document of Allied Vision Technologies are brands protected by law.

Warranty

The information provided by Allied Vision Technologies is supplied without any guarantees or warranty whatsoever, be it specific or implicit. Also excluded are all implicit warranties concerning the negotiability, the suitability for specific applications or the non-breaking of laws and patents. Even if we assume that the information supplied to us is accurate, errors and inaccuracy may still occur.

Copyright

Managing Director: Mr. Frank Grube
Tax ID: DE 184383113

Headquarters:

Taschenweg 2A
D-07646 Stadtroda, Germany
Tel.: +49 (0)36428 6770
Fax: +49 (0)36428 677-28
e-mail: info@alliedvisiontec.com

Contents

Contacting Allied Vision Technologies

Info

- **Technical information:**
  http://www.alliedvisiontec.com
- **Support:**
  support@alliedvisiontec.com

Allied Vision Technologies GmbH (Headquarters)
Taschenweg 2a
07646 Stadtroda, Germany
Tel.: +49 36428-677-0
Fax.: +49 36428-677-28
e-mail: info@alliedvisiontec.com

Allied Vision Technologies Canada Inc.
101-3750 North Fraser Way
Burnaby, BC, V5J 5E9, Canada
Tel: +1 604-875-8855
Fax: +1 604-875-8856
e-mail: info@alliedvisiontec.com

Allied Vision Technologies Inc.
38 Washington Street
Newburyport, MA 01950, USA
Toll Free number +1 877-USA-1394
Tel.: +1 978-225-2030
Fax: +1 978-225-2029
e-mail: info@alliedvisiontec.com

Allied Vision Technologies Asia Pte. Ltd.
82 Playfair Road
#07-02 D'Lithium
Singapore 368001
Tel: +65 6634-9027
Fax: +65 6634-902
e-mail: info@alliedvisiontec.com

Introduction

This **MANTA Technical Manual** describes in depth the technical specifications, dimensions, all pixel formats, bandwidth and frame rate related subjects.

For information on hardware installation, safety warnings, pin assignments on I/O connectors and GigE port connectors read the **Manta Hardware Installation Guide**.

For information on camera features (camera controls) read the **AVT Manta Camera Controls** document.

Note

Please read through this manual carefully.

We assume that you have read already the **Manta Hardware Installation Guide** and that you have installed the hardware and software on your PC or laptop (Gigabit Ethernet network card, cables).

http://www.alliedvisiontec.com/emea/support/downloads/product-literature/hardware-installation-guide.html

Document history

Version	Date	Remarks
V2.0.3	15.04.10	New Manual - RELEASE status
V3.0.0	09.06.10	Added Manta G-046, G-145, G-201, G-146: • Chapter Manta G-046B/C on page 21f. • Chapter Manta G-145B/C (-30fps*) on page 25f. • Chapter Manta G-146B/C on page 27f. • Chapter Manta G-201B/C (-30fps*) on page 29f. • Chapter Spectral sensitivity on page 33ff. • Table 18: Image memory size (typical; see note above) on page 75 • Chapter Manta G-046B/C: ROI frame rates on page 80 • Chapter Manta G-145B/C: ROI frame rates on page 82 • Chapter Manta G-146B/C: ROI frame rates on page 84 • Chapter Manta G-201B/C: ROI frame rates on page 85
to be continued on next page		

Table 1: Document history

Version	Date	Remarks
		continued from last page
V3.0.0 [continued]	09.06.10 [continued]	[continued] • With the new firmware 1.40 due to a bug all Manta models have only 12 bit in the data path (even if the ADC delivers 14 bit): See Figure 34: Block diagram b/w camera on page 66 and Figure 35: Block diagram color camera on page 66. • Due to a repaired bug in FPGA and microcontroller, the StreamHoldCapacity changed: Manta G-032 from 49 frames to 99 frames, Manta G-125 from 12 frames to 25 frames: see Chapter Manta G-032B/C on page 16 and Chapter Manta G-125B/C on page 23 • RGBA24 and BGRA24 are not supported, see Chapter Specifications on page 16ff. • Manta board level cameras have now a cooling plate: see – Chapter Manta board level (non PoE): dimensions on page 53 – Chapter Manta board level: C-Mount on page 54 – Chapter Manta board level: CS-Mount on page 55 – Chapter Manta board level: M12-Mount on page 56 • Added Chapter Firmware update on page 87
V4.0.0	25.10.10	• Added the information, that description of status LEDs can be found in **Manta Hardware Installation Guide**, see Note on page 57 • Changed file format from FM7 to FM9 **Added Manta G-033B/C (sensor: Sony ICX 414) and Manta G-504B/C (sensor: Sony ICX 655):** • Chapter Manta G-033B/C on page 19 • Chapter Manta G-504B/C on page 31 • Chapter Spectral sensitivity on page 33ff. • Chapter Camera lenses on page 43 • Table 18: Image memory size (typical; see note above) on page 75 • Chapter Resolution and ROI frame rates on page 78 • Manta angled head models: Chapter Manta W90 (1 x GigE) on page 47ff.
		to be continued on next page

Table 1: Document history

Version	Date	Remarks
		continued from last page
V4.0.1	05.01.11	• Changed tripod drawing: added dimensions of three big holes (M6 and UNC 1/4-20) in Figure 19: Tripod dimensions on page 46. • In specifications tables color pixel formats: inserted Mono8. Added Note, that Raw 8, Raw16 displayed in some viewers means the same as Bayer8, Bayer16: see Chapter Specifications on page 16ff. • Changed GigE Vision V1.0 to V1.2 in all specification tables in Chapter Specifications on page 16ff.
V4.1.0	24.06.11	**Added PoE:** • Added power requirements, power consumption and regulations for Manta PoE models: see Chapter Specifications on page 16ff. • Added note about PoE capable cameras in Chapter Specifications on page 16 and Chapter Gigabit Ethernet port on page 58 • PoE cameras <220 g (without lens): see Chapter Specifications on page 16ff. **Corrected frame rate formulas for Manta G-033/G504:** • See Chapter Manta G-033B/C: ROI frame rates on page 79 and Chapter Manta G-504B/C: ROI frame rates on page 87 **C-/CS-Mount no more adjustable, for modifications contact Customer Care and send camera to AVT:** • See C/CS-Mount descriptions in specification tables in Chapter Specifications on page 16ff. • See Chapter Adjustment of C-Mount on page 51 • See Chapter Adjustment of CS-Mount on page 52 **Manta board level:** • Manta board level: deleted (PWR output on demand) at Pin2: in Figure 26: Manta board level dimensions on page 53 **Added new address:** • Added Singapore address in Chapter *Contacting Allied Vision Technologies* on page 5 **Removed Chapter Firmware update (see Knowledge Base at AVT Website: search for Application Note GigE Firmware Update)**
		to be continued on next page

Table 1: Document history

Version	Date	Remarks
		continued from last page
[continued] V4.1.0	[continued] 24.06.11	**Manta firmware upgrade:** • Revised data path block diagram in Chapter Block diagrams of the cameras on page 66 • Added 30fps variant for Manta G-145-30fps and Manta G-201-30fps: – see Chapter Manta G-145B/C (-30fps*) on page 25 and Formula 7: Manta G-145-30fps: theoretical max. frame rate of CCD on page 83 and Chapter Frame memory on page 75 – Chapter Manta G-201B/C (-30fps*) on page 29 and Chapter Frame memory on page 75 • Added Mono12Packed for b/w cameras and Bayer12Packed for color cameras: see Chapter Specifications on page 16ff. • Added the following camera controls in Chapter Available Manta camera controls on page 67ff.: – Chunk Data – EventControls – StreamFramerateConstrain – FrameStartTriggerOverlap – PayloadSize – NonImagePayloadSize – SyncInGlitchFilter – AutoIris – Gamma – LUT **Manta G-145-30fps and Manta G-201-30fps (non PoE)** • … have same I/O pin assignment (input circuits and voltage range), power LED and upside down PoE plug as PoE models: see Exception on page 58 • Manta G-145-30fps / 201-30fps non-PoE behave like PoE cameras. on page 59

Table 1: Document history

Manual overview

This **manual overview** outlines the contents of each chapter of this manual.

- Chapter *Contacting Allied Vision Technologies* on page 5 lists AVT contact data (phone numbers and URLs) for both:
  - Technical information / ordering
  - Commercial information
- Chapter *Introduction* on page 6 (this chapter) gives you the document history, a manual overview (short description of each chapter) and conventions used in this manual (styles and symbols). Furthermore you learn how to get more information on **how to install hardware (Manta Hardware Installation Guide)**, available **AVT software** (incl. documentation) and where to get it.
- Chapter MANTA GigE cameras on page 13 gives you a short introduction to the MANTA cameras with their GigE technology. Links are provided to information on **GigE Vision and GenICam** and to data sheets and brochures on AVT website.
- Chapter Conformity on page 15 gives you information about conformity of AVT cameras (CE, FCC, RoHS).
- Chapter Filter and lenses on page 42 describes filter for monochrome and color cameras. For the IR cut filter a spectral transmission diagram is provided. Suitable camera lenses for different focal lengths are provided for different camera models.
- Chapter Specifications on page 16 lists camera details and measured spectral sensitivity diagrams for each camera type.
- Chapter Camera dimensions on page 45 provides CAD drawings of standard housing models (2D drawings and 3D isometric drawings), tripod adapter and cross sections of CS-Mount and C-Mount. Furthermore you find information on adjustment of C-Mount and CS-Mount.
- Chapter Camera interfaces on page 57 describes in general the inputs/outputs of the cameras (incl. trigger features): Gigabit Ethernet port, camera I/O connector pin assignment, schematic input/output block diagrams as well as a general description of trigger (timing diagram, definitions and rules). For a detailed technical description of the interfaces (GigE port and I/O connector) see **Manta Hardware Installation Guide**.
- Chapter Description of the data path on page 66 describes the data path of the Manta cameras in block diagrams as well as available Manta camera controls. For a detailed description of all camera controls see the document: **AVT Manta Camera Controls**. Furthermore the image memory, color interpolation is described.
- Chapter Resolution and ROI frame rates on page 78 lists theoretical formulas for the maximum frame rate of CCD (depending on ROI height).
- Chapter Appendix on page 88 lists the sensor position accuracy of AVT GigE cameras.
- Chapter Index on page 89 gives you quick access to all relevant data in this manual.

Conventions used in this manual

To give this manual an easily understood layout and to emphasize important information, the following typographical styles and symbols are used:

Styles

Style	Function	Example
Bold	Programs, inputs or highlighting important things	**bold**
Courier	Code listings etc.	`Input`
Upper case	Register	REGISTER
Italics	Modes, fields	*Mode*
Parentheses and/or blue	Links	(Link)

Table 2: Styles

Symbols

Note

This symbol highlights important information.

Caution

This symbol highlights important instructions. You have to follow these instructions to avoid malfunctions.

www

This symbol highlights URLs for further information. The URL itself is shown in blue.

Example:

http://www.alliedvisiontec.com

More information

For more information on hardware and software read the following:

- **Manta Hardware Installation Guide** describes the hardware installation procedures for all AVT GigE cameras (Manta). Additionally you get safety instructions and information about camera interfaces (GigE port, PoE, I/O connectors, input and output).
- **AVT Manta Camera Controls** describes the camera controls of the AVT GigE SDK (PvAPI) and feature related items.

www

For **downloading the Manta Hardware Installation Guide** and **AVT Manta Camera Controls** go to:

http://www.alliedvisiontec.com/emea/support/downloads/product-literature.html

www

All **software packages** (including **documentation** and **release notes**) provided by AVT can be downloaded at:

http://www.alliedvisiontec.com/emea/products/software.html

Before operation

We place the highest demands for quality on our cameras.

Target group This **Technical Manual** is the guide to detailed technical information of the camera and **is written for experts**.

Getting started For a quick guide how to get started read **Manta Hardware Installation Guide** first.

Note

Please read through this manual carefully before operating the camera.

For information on **AVT accessories** and **AVT software** read **Manta Hardware Installation Guide**.

Caution

Before operating any AVT camera read **safety instructions** and **ESD warnings** in **Manta Hardware Installation Guide**.

MANTA GigE cameras

Manta

This **camera family has a Gigabit Ethernet interface**. The Manta is a simple, robust digital camera for industrial imaging applications that makes the advantages of GigE Vision technology, together with AVT quality, completely affordable.

With the Manta, Allied Vision Technologies presents a wide range of cameras with **Gigabit Ethernet interfaces**.

Image applications

Allied Vision Technologies can provide users with a range of products that meet almost all the requirements of a very wide range of image applications.

GigE

GigE is the abbreviation for **Gig**abit **E**thernet.

All AVT Manta cameras are GigE Vision compliant cameras with Gigabit Ethernet interface. AVT Manta cameras work with standard Gigabit Ethernet hardware and cables and can have cable lengths up to 100 m, using conventional Cat5e network cabling.

GigE Vision standard (for Gigabit Ethernet cameras) and IEEE 1394/IIDC (for FireWire cameras) are both the state of the art interfaces for high-performance digital cameras for machine vision and industrial applications.

Gigabit Ethernet with its data rate of 1000 Mbit/s or 1 Gbit/s is capable of handling streaming image data and providing reliable transmission of image data from high performance machine vision cameras such as the MANTA cameras from AVT.

GigE Vision

The GigE Vision standard is an **interface standard for high-performance machine vision cameras** that is widely supported in the industrial imaging industry. GigE (Gigabit Ethernet), on the other hand, is simply the network structure on which GigE Vision is built.

The GigE Vision standard includes both a hardware interface standard (Gigabit Ethernet) and standardized means of communicating with a camera and controlling a camera.

GenICam

The GigE Vision **camera control registers** are based on a command structure called GenICam which is administered through the **E**uropean **M**achine **V**ision **A**ssociation (EMVA). GenICam seeks to establish a **common camera control interface** so that third party software can communicate with cameras from various manufacturers without customization. GenICam is incorporated as part of the GigE Vision standard, so any truly GigE Vision compliant camera also complies with GenICam. GigE Vision is analogous to FireWire's DCAM (IIDC) and has great value for reducing system integration costs and for improving ease of use.

www

For further information on **GigE Vision and GenICam** read:

http://www.alliedvisiontec.com/emea/support/application-notes.html

www

For further information on the highlights of Manta **types**, the Manta **family** and the whole range of **AVT GigE cameras** read the data sheets and brochures on the website of Allied Vision Technologies:

http://www.alliedvisiontec.com/emea/products/cameras.html

Conformity

Allied Vision Technologies declares under its sole responsibility that all standard cameras of the **AVT Manta** family to which this declaration relates are in conformity with the following standard(s) or other normative document(s):

- CE, following the provisions of 2004/108/EG directive
  (**Manta** board level cameras do not have CE)
- FCC Part 15 Class B
  (**Manta** board level cameras: prepared for FCC Class B)
- RoHS (2002/95/EC)

CE

We declare, under our sole responsibility, that the previously described **AVT Manta** cameras conform to the directives of the CE.

FCC – Class B Device

Note: This equipment has been tested and found to comply with the limits for a Class B digital device, pursuant to part 15 of the FCC Rules. These limits are designed to provide reasonable protection against harmful interference in a residential environment. This equipment generates, uses, and can radiate radio frequency energy and, if not installed and used in accordance with the instructions, may cause harmful interference to radio communications. Operation of this equipment in a residential area is likely to cause harmful interference in which case the user will be required to correct the interference at his own expense. You are cautioned that any changes or modifications not expressly approved in this manual could void your authority to operate this equipment.

Specifications

Note

PoE capable cameras

How can I distinguish between PoE capable cameras and cameras that are not PoE capable?

PoE capable cameras have the letters **PoE** written on the camera's label on the bottom side of the camera.

Manta G-032B/C

Feature	Specification
Image device	Type 1/3 (diag. 6 mm) progressive scan SONY IT CCD ICX424AL/AQ with HAD microlens
Effective chip size	**4.9 mm x 3.7 mm**
Cell size	7.4 µm x 7.4 µm
Picture size (max.)	656 x 492 pixels
Lens mount	C-Mount: 17.526 mm (in air); Ø 25.4 mm (32 tpi) maximum protrusion: 9.7 mm (see Figure 24: Manta C-Mount dimensions on page 51) CS-Mount: 12.526 mm (in air); Ø 25.4 mm (32 tpi) maximum protrusion: 5.1 mm (see Figure 25: Manta CS-Mount dimensions on page 52) **Note** **Maximum protrusion** means the distance from lens flange to the glass filter in the camera.
ADC	12 bit
Pixel format	**Only b/w:** Mono8, Mono12Packed, Mono16 **Only color:** Bayer8, Bayer12Packed, Bayer16, Mono8, RGB24, YUV411, YUV422, YUV444, BGR24 **Note** Depending on the used viewer: Raw8, Raw16 may be displayed instead of Bayer8, Bayer16, meaning the same.
Frame rates	Up to 80 fps
Gain control	Manual: 0-36 dB (1 dB/step); auto gain (select. ROI)
Exposure time	26 µs ... 60 s; auto shutter (select. ROI)

Table 3: Specification Manta G-032B/C

Feature	Specification
External trigger event	Rising edge, falling edge, any edge, level high, level low
External trigger delay	0 to 60 seconds in 1 µs increments
Fixed rate control	1 fps ... max. frame rate (steps of 0.1 fps)
Imaging modes	Free-running, external trigger, fixed rate, software trigger
Sync Out modes	Trigger ready, trigger input, exposing, readout, imaging, strobe, GPO
Internal image memory	32 MByte, up to 99 frames **Note** The number of frames (StreamHoldCapacity) depends on resolution and pixel format. Listed number of frames is typical for full resolution and Mono8/Bayer8.
Smart functions	AGC (auto gain control), auto exposure control, 32 MByte image memory, binning (monochrome binning, also for color cameras; but no color binning), **no** decimation (**no** sub-sampling), 5 config files (user sets) **only color:** auto white balance, color correction, edge filter (sharpness), hue, saturation
I/O	Two configurable optocoupled inputs, two configurable optocoupled outputs RS232 port (serial port)
Digital interface	IEEE 802.3 1000BASE-T (GigE Vision V1.2)
Camera control interface	GenICam V1.0 compliant
Power requirements	DC 8 V - 30 V only via 12-pin HIROSE: **external power supply needed** or **PoE** models: Power over Ethernet IEEE 802.3at compliant
Power consumption	Typical <3.6 watt (@ 12 V DC); **PoE:** typical <3.6 watt (maximal frame rates at full resolution)
Dimensions	86.4 mm x 44 mm x 29 mm (L x W x H); incl. connectors, without tripod and lens
Mass	<200 g (without lens); **PoE:** <220 g (without lens)
Operating temperature	+ 5 °C ... + 45 °C ambient temperature (without condensation)
Storage temperature	- 10 °C ... + 70 °C ambient temperature (without condensation)
Regulations	CE, FCC Class B, RoHS (2002/95/EC), PoE IEEE 802.3at
Standard accessories	**b/w:** protection glass **color:** IR cut filter
Optional accessories	**b/w:** IR cut filter, IR pass filter **color:** protection glass Tripod adapter
On request	Gigabit Ethernet network card, Gigabit Ethernet network cables
Software packages	AVT Universal Package, AVT PvAPI SDK (no charge for either package)

Table 3: Specification Manta G-032B/C

Note

The design and specifications for the products described above may change without notice.

Caution

Due to the small packaging and high speed of the Manta cameras, take special care to maintain a reasonable operating temperature.
If the camera is to be operated in a warm environment:

- **Mount the camera on a heat sink such as a metal bracket.**
- Take care that there is **sufficient air flow**.

Manta G-033B/C

Feature	Specification
Image device	Type 1/2 (diag. 8 mm) progressive scan SONY IT CCD ICX414AL/AQ with HAD microlens
Effective chip size	**6.5 mm x 4.9 mm**
Cell size	9.9 µm x 9.9 µm
Picture size (max.)	656 x 492 pixels
Lens mount	C-Mount: 17.526 mm (in air); Ø 25.4 mm (32 tpi) maximum protrusion: 9.7 mm (see Figure 24: Manta C-Mount dimensions on page 51) CS-Mount: 12.526 mm (in air); Ø 25.4 mm (32 tpi) maximum protrusion: 5.1 mm (see Figure 25: Manta CS-Mount dimensions on page 52) **Note** **Maximum protrusion** means the distance from lens flange to the glass filter in the camera.
ADC	14 bit
Pixel format	**Only b/w:** Mono8, Mono12Packed, Mono16 **Only color:** Bayer8, Bayer12Packed, Bayer16, Mono8, RGB24, YUV411, YUV422, YUV444, BGR24 **Note** Depending on the used viewer: Raw8, Raw16 may be displayed instead of Bayer8, Bayer16, meaning the same.
Frame rates	Up to 88 fps
Gain control	Manual: 0-35 dB (1 dB/step); auto gain (select. ROI)
Exposure time	26 µs ... 60 s; auto shutter (select. ROI)
External trigger event	Rising edge, falling edge, any edge, level high, level low
External trigger delay	0 to 60 seconds in 1 µs increments
Fixed rate control	1 fps ... max. frame rate (steps of 0.1 fps)
Imaging modes	Free-running, external trigger, fixed rate, software trigger
Sync Out modes	Trigger ready, trigger input, exposing, readout, imaging, strobe, GPO
Internal image memory	32 MByte, up to 99 frames **Note** The number of frames (StreamHoldCapacity) depends on resolution and pixel format. Listed number of frames is typical for full resolution and Mono8/Bayer8.

Table 4: Specification Manta G-033B/C

Feature	Specification
Smart functions	AGC (auto gain control), auto exposure control, 32 MByte image memory, binning (monochrome binning, also for color cameras; but no color binning), decimation (sub-sampling), 5 config files (user sets) **only color:** auto white balance, color correction, edge filter (sharpness), hue, saturation
I/O	Two configurable optocoupled inputs, two configurable optocoupled outputs RS232 port (serial port)
Digital interface	IEEE 802.3 1000BASE-T (GigE Vision V1.2)
Camera control interface	GenICam V1.0 compliant
Power requirements	DC 8 V - 30 V only via 12-pin HIROSE: **external power supply needed** or **PoE** models: Power over Ethernet IEEE 802.3at compliant
Power consumption	Typical <3.6 watt (@ 12 V DC); **PoE:** typical <3.6 watt (maximal frame rates at full resolution)
Dimensions	86.4 mm x 44 mm x 29 mm (L x W x H); incl. connectors, without tripod and lens
Mass	<200 g (without lens); **PoE:** <220 g (without lens)
Operating temperature	+ 5 °C ... + 45 °C ambient temperature (without condensation)
Storage temperature	- 10 °C ... + 70 °C ambient temperature (without condensation)
Regulations	CE, FCC Class B, RoHS (2002/95/EC), PoE IEEE 802.3at
Standard accessories	**b/w:** protection glass **color:** IR cut filter
Optional accessories	**b/w:** IR cut filter, IR pass filter **color:** protection glass Tripod adapter
On request	Gigabit Ethernet network card, Gigabit Ethernet network cables
Software packages	AVT Universal Package, AVT PvAPI SDK (no charge for either package)

Table 4: Specification Manta G-033B/C

Note

The design and specifications for the products described above may change without notice.

Caution

Due to the small packaging and high speed of the Manta cameras, take special care to maintain a reasonable operating temperature.
If the camera is to be operated in a warm environment:

- **Mount the camera on a heat sink such as a metal bracket.**
- Take care that there is **sufficient air flow**.

Manta G-046B/C

Feature	Specification
Image device	Type 1/2 (diag. 8 mm) progressive scan SONY IT CCD ICX415AL/AQ with HAD microlens
Effective chip size	**6.5 mm x 4.8 mm**
Cell size	8.3 µm x 8.3 µm
Picture size (max.)	780 x 580 pixels
Lens mount	C-Mount: 17.526 mm (in air); Ø 25.4 mm (32 tpi) maximum protrusion: 9.7 mm (see Figure 24: Manta C-Mount dimensions on page 51) CS-Mount: 12.526 mm (in air); Ø 25.4 mm (32 tpi) maximum protrusion: 5.1 mm (see Figure 25: Manta CS-Mount dimensions on page 52) **Note** **Maximum protrusion** means the distance from lens flange to the glass filter in the camera.
ADC	14 bit
Pixel format	**Only b/w:** Mono8, Mono12Packed, Mono16 **Only color:** Bayer8, Bayer12Packed, Bayer16, Mono8, RGB24, YUV411, YUV422, YUV444, BGR24 **Note** Depending on the used viewer: Raw8, Raw16 may be displayed instead of Bayer8, Bayer16, meaning the same.
Frame rates	Up to 67 fps
Gain control	Manual: 0-31 dB (1 dB/step); auto gain (select. ROI)
Exposure time	26 µs ... 60 s; auto shutter (select. ROI)
External trigger event	Rising edge, falling edge, any edge, level high, level low
External trigger delay	0 to 60 seconds in 1 µs increments
Fixed rate control	1 fps ... max. frame rate (steps of 0.1 fps)
Imaging modes	Free-running, external trigger, fixed rate, software trigger
Sync Out modes	Trigger ready, trigger input, exposing, readout, imaging, strobe, GPO
Internal image memory	32 MByte, up to 70 frames **Note** The number of frames (StreamHoldCapacity) depends on resolution and pixel format. Listed number of frames is typical for full resolution and Mono8/Bayer8.

Table 5: Specification Manta G-046B/C

Feature	Specification
Smart functions	AGC (auto gain control), auto exposure control, 32 MByte image memory, binning (monochrome binning, also for color cameras; but no color binning), decimation (sub-sampling), 5 config files (user sets) **only color:** auto white balance, color correction, edge filter (sharpness), hue, saturation
I/O	Two configurable optocoupled inputs, two configurable optocoupled outputs RS232 port (serial port)
Digital interface	IEEE 802.3 1000BASE-T (GigE Vision V1.2)
Camera control interface	GenICam V1.0 compliant
Power requirements	DC 8 V - 30 V only via 12-pin HIROSE: **external power supply needed** or **PoE** models: Power over Ethernet IEEE 802.3at compliant
Power consumption	Typical <3.6 watt (@ 12 V DC); **PoE:** typical <3.6 watt (maximal frame rates at full resolution)
Dimensions	86.4 mm x 44 mm x 29 mm (L x W x H); incl. connectors, without tripod and lens
Mass	<200 g (without lens); **PoE:** <220 g (without lens)
Operating temperature	+ 5 °C ... + 45 °C ambient temperature (without condensation)
Storage temperature	- 10 °C ... + 70 °C ambient temperature (without condensation)
Regulations	CE, FCC Class B, RoHS (2002/95/EC), PoE IEEE 802.3at
Standard accessories	**b/w:** protection glass **color:** IR cut filter
Optional accessories	**b/w:** IR cut filter, IR pass filter **color:** protection glass Tripod adapter
On request	Gigabit Ethernet network card, Gigabit Ethernet network cables
Software packages	AVT Universal Package, AVT PvAPI SDK (no charge for either package)

Table 5: Specification Manta G-046B/C

Note

The design and specifications for the products described above may change without notice.

Caution

Due to the small packaging and high speed of the Manta cameras, take special care to maintain a reasonable operating temperature.
If the camera is to be operated in a warm environment:

- **Mount the camera on a heat sink such as a metal bracket.**
- Take care that there is **sufficient air flow**.

Manta G-125B/C

Feature	Specification
Image device	Type 1/3 (diag. 6 mm) progressive scan SONY IT CCD ICX445ALA/AQA with EXview HAD microlens
Effective chip size	**4.8 mm x 3.6 mm**
Cell size	3.75 µm x 3.75 µm
Picture size (max.)	1292 x 964 pixels
Lens mount	C-Mount: 17.526 mm (in air); Ø 25.4 mm (32 tpi) maximum protrusion: 9.7 mm (see Figure 24: Manta C-Mount dimensions on page 51) CS-Mount: 12.526 mm (in air); Ø 25.4 mm (32 tpi) maximum protrusion: 5.1 mm (see Figure 25: Manta CS-Mount dimensions on page 52) **Note** **Maximum protrusion** means the distance from lens flange to the glass filter in the camera.
ADC	14 bit
Pixel format	**Only b/w:** Mono8, Mono12Packed, Mono16 **Only color:** Bayer8, Bayer12Packed, Bayer16, Mono8, RGB24, YUV411, YUV422, YUV444, BGR24 **Note** Depending on the used viewer: Raw8, Raw16 may be displayed instead of Bayer8, Bayer16, meaning the same.
Frame rates	Up to 30 fps
Gain control	Manual: 0-31 dB (1 dB/step); auto gain (select. ROI)
Exposure time	21 µs ... 60 s; auto shutter (select. ROI)
External trigger event	Rising edge, falling edge, any edge, level high, level low
External trigger delay	0 to 60 seconds in 1 µs increments
Fixed rate control	1 fps ... max. frame rate (steps of 0.1 fps)
Imaging modes	Free-running, external trigger, fixed rate, software trigger
Sync Out modes	Trigger ready, trigger input, exposing, readout, imaging, strobe, GPO
Internal image memory	32 MByte, up to 25 frames **Note** The number of frames (StreamHoldCapacity) depends on resolution and pixel format. Listed number of frames is typical for full resolution and Mono8/Bayer8.

Table 6: Specification Manta G-125B/C

Feature	Specification
Smart functions	AGC (auto gain control), auto exposure control, 32 MByte image memory, binning (monochrome binning, also for color cameras; but no color binning), decimation (sub-sampling), 5 config files (user sets) **only color:** auto white balance, color correction, edge filter (sharpness), hue, saturation
I/O	Two configurable optocoupled inputs, two configurable optocoupled outputs RS232 port (serial port)
Digital interface	IEEE 802.3 1000BASE-T (GigE Vision V1.2)
Camera control interface	GenICam V1.0 compliant
Power requirements	DC 8 V - 30 V only via 12-pin HIROSE: **external power supply needed** or **PoE** models: Power over Ethernet IEEE 802.3at compliant
Power consumption	Typical <3.6 watt (@ 12 V DC); **PoE:** typical < 3.6 watt (maximal frame rates at full resolution)
Dimensions	86.4 mm x 44 mm x 29 mm (L x W x H); incl. connectors, without tripod and lens
Mass	<200 g (without lens); **PoE:** <220 g (without lens)
Operating temperature	+ 5 °C ... + 45 °C ambient temperature (without condensation)
Storage temperature	- 10 °C ... + 70 °C ambient temperature (without condensation)
Regulations	CE, FCC Class B, RoHS (2002/95/EC), PoE IEEE 802.3at
Standard accessories	**b/w:** protection glass **color:** IR cut filter
Optional accessories	**b/w:** IR cut filter, IR pass filter **color:** protection glass Tripod adapter
On request	Gigabit Ethernet network card, Gigabit Ethernet network cables
Software packages	AVT Universal Package, AVT PvAPI SDK (no charge for either package)

Table 6: Specification Manta G-125B/C

Note

The design and specifications for the products described above may change without notice.

Caution

Due to the small packaging and high speed of the Manta cameras, take special care to maintain a reasonable operating temperature.
If the camera is to be operated in a warm environment:

- **Mount the camera on a heat sink such as a metal bracket.**
- Take care that there is **sufficient air flow**.

Manta G-145B/C (-30fps*)

*: 30fps model only

Feature	Specification
Image device	Type 2/3 (diag. 11 mm) progressive scan SONY IT CCD ICX285AL/AQ with EXview HAD microlens
Effective chip size	**9.0 mm x 6.7 mm**
Cell size	6.45 µm x 6.45 µm
Picture size (max.)	1388 x 1038 pixels
Lens mount	C-Mount: 17.526 mm (in air); Ø 25.4 mm (32 tpi) maximum protrusion: 9.7 mm (see Figure 24: Manta C-Mount dimensions on page 51) CS-Mount: 12.526 mm (in air); Ø 25.4 mm (32 tpi) maximum protrusion: 5.1 mm (see Figure 25: Manta CS-Mount dimensions on page 52) **Note** **Maximum protrusion** means the distance from lens flange to the glass filter in the camera.
ADC	14 bit
Pixel format	**Only b/w:** Mono8, Mono12Packed, Mono16 **Only color:** Bayer8, Bayer12Packed, Bayer16, Mono8, RGB24, YUV411, YUV422, YUV444, BGR24 **Note** Depending on the used viewer: Raw8, Raw16 may be displayed instead of Bayer8, Bayer16, meaning the same.
Frame rates	Up to 16 fps (* 31 fps)
Gain control	Manual: 0-33 dB (1 dB/step); auto gain (select. ROI)
Exposure time	38 (*37) µs ... 60 s; auto shutter (select. ROI)
External trigger event	Rising edge, falling edge, any edge, level high, level low
External trigger delay	0 to 60 seconds in 1 µs increments
Fixed rate control	1 fps ... max. frame rate (steps of 0.1 fps)
Imaging modes	Free-running, external trigger, fixed rate, software trigger
Sync Out modes	Trigger ready, trigger input, exposing, readout, imaging, strobe, GPO
Internal image memory	32 MByte, up to 22 frames **Note** The number of frames (StreamHoldCapacity) depends on resolution and pixel format. Listed number of frames is typical for full resolution and Mono8/Bayer8.

Table 7: Specification Manta G-145B/C (*:-30fps)

Feature	Specification
Smart functions	AGC (auto gain control), auto exposure control, 32 MByte image memory, binning (monochrome binning, also for color cameras; but no color binning), decimation (sub-sampling), 5 config files (user sets) **only color:** auto white balance, color correction, edge filter (sharpness), hue, saturation
I/O	Two configurable optocoupled inputs, two configurable optocoupled outputs RS232 port (serial port)
Digital interface	IEEE 802.3 1000BASE-T (GigE Vision V1.2)
Camera control interface	GenICam V1.0 compliant
Power requirements	DC 8 V - 30 V only via 12-pin HIROSE: **external power supply needed** or **PoE** models: Power over Ethernet IEEE 802.3at compliant
Power consumption	Typical <3.7 (4.5*) watt (@ 12 V DC); **PoE:** typical < 3.8 (4.5*) watt (maximal frame rates at full resolution)
Dimensions	86.4 mm x 44 mm x 29 mm (L x W x H); incl. connectors, without tripod and lens
Mass	<200 g (without lens); **PoE:** <220 g (without lens)
Operating temperature	+ 5 °C ... + 45 °C ambient temperature (without condensation)
Storage temperature	- 10 °C ... + 70 °C ambient temperature (without condensation)
Regulations	CE, FCC Class B, RoHS (2002/95/EC), PoE IEEE 802.3at
Standard accessories	**b/w:** protection glass **color:** IR cut filter
Optional accessories	**b/w:** IR cut filter, IR pass filter **color:** protection glass Tripod adapter
On request	Gigabit Ethernet network card, Gigabit Ethernet network cables
Software packages	AVT Universal Package, AVT PvAPI SDK (no charge for either package)

Table 7: Specification Manta G-145B/C (*:-30fps)

Note

The design and specifications for the products described above may change without notice.

Caution

Due to the small packaging and high speed of the Manta cameras, take special care to maintain a reasonable operating temperature.
If the camera is to be operated in a warm environment:

- **Mount the camera on a heat sink such as a metal bracket.**
- Take care that there is **sufficient air flow**.

Manta G-146B/C

Feature	Specification
Image device	Type 1/2 (diag. 8 mm) progressive scan SONY IT CCD ICX267AL/AK with HAD microlens
Effective chip size	**6.5 mm x 4.8 mm**
Cell size	4.65 µm x 4.65 µm
Picture size (max.)	1388 x 1038 pixels
Lens mount	C-Mount: 17.526 mm (in air); Ø 25.4 mm (32 tpi) maximum protrusion: 9.7 mm (see Figure 24: Manta C-Mount dimensions on page 51) CS-Mount: 12.526 mm (in air); Ø 25.4 mm (32 tpi) maximum protrusion: 5.1 mm (see Figure 25: Manta CS-Mount dimensions on page 52) **Note** **Maximum protrusion** means the distance from lens flange to the glass filter in the camera.
ADC	14 bit
Pixel format	**Only b/w:** Mono8, Mono12Packed, Mono16 **Only color:** Bayer8, Bayer12Packed, Bayer16, Mono8, RGB24, YUV411, YUV422, YUV444, BGR24 **Note** Depending on the used viewer: Raw8, Raw16 may be displayed instead of Bayer8, Bayer16, meaning the same.
Frame rates	Up to 17 fps
Gain control	Manual: 0-33 dB (1 dB/step); auto gain (select. ROI)
Exposure time	31 µs ... 60 s; auto shutter (select. ROI)
External trigger event	Rising edge, falling edge, any edge, level high, level low
External trigger delay	0 to 60 seconds in 1 µs increments
Fixed rate control	1 fps ... max. frame rate (steps of 0.1 fps)
Imaging modes	Free-running, external trigger, fixed rate, software trigger
Sync Out modes	Trigger ready, trigger input, exposing, readout, imaging, strobe, GPO
Internal image memory	32 MByte, up to 22 frames **Note** The number of frames (StreamHoldCapacity) depends on resolution and pixel format. Listed number of frames is typical for full resolution and Mono8/Bayer8.

Table 8: Specification Manta G-146B/C

Feature	Specification
Smart functions	AGC (auto gain control), auto exposure control, 32 MByte image memory, binning (monochrome binning, also for color cameras; but no color binning), decimation (sub-sampling), 5 config files (user sets) **only color:** auto white balance, color correction, edge filter (sharpness), hue, saturation
I/O	Two configurable optocoupled inputs, two configurable optocoupled outputs RS232 port (serial port)
Digital interface	IEEE 802.3 1000BASE-T (GigE Vision V1.2)
Camera control interface	GenICam V1.0 compliant
Power requirements	DC 8 V - 30 V only via 12-pin HIROSE: **external power supply needed** or **PoE** models: Power over Ethernet IEEE 802.3at compliant
Power consumption	Typical <3.6 watt (@ 12 V DC); **PoE:** typical < 3.8 watt (maximal frame rates at full resolution)
Dimensions	86.4 mm x 44 mm x 29 mm (L x W x H); incl. connectors, without tripod and lens
Mass	<200 g (without lens); **PoE:** <220 g (without lens)
Operating temperature	+ 5 °C ... + 45 °C ambient temperature (without condensation)
Storage temperature	- 10 °C ... + 70 °C ambient temperature (without condensation)
Regulations	CE, FCC Class B, RoHS (2002/95/EC), PoE IEEE 802.3at
Standard accessories	**b/w:** protection glass **color:** IR cut filter
Optional accessories	**b/w:** IR cut filter, IR pass filter **color:** protection glass Tripod adapter
On request	Gigabit Ethernet network card, Gigabit Ethernet network cables
Software packages	AVT Universal Package, AVT PvAPI SDK (no charge for either package)

Table 8: Specification Manta G-146B/C

Note

The design and specifications for the products described above may change without notice.

Caution

Due to the small packaging and high speed of the Manta cameras, take special care to maintain a reasonable operating temperature.
If the camera is to be operated in a warm environment:

- **Mount the camera on a heat sink such as a metal bracket.**
- Take care that there is **sufficient air flow**.

Manta G-201B/C (-30fps*)

*: 30fps model only

Feature	Specification
Image device	Type 1/1.8 (diag. 8.9 mm) progressive scan SONY IT CCD ICX274AL/AQ with Super HAD microlens
Effective chip size	**7.1 mm x 5.4 mm**
Cell size	4.40 µm x 4.40 µm
Picture size (max.)	1624 x 1234 pixels
Lens mount	C-Mount: 17.526 mm (in air); Ø 25.4 mm (32 tpi) maximum protrusion: 9.7 mm (see Figure 24: Manta C-Mount dimensions on page 51) CS-Mount: 12.526 mm (in air); Ø 25.4 mm (32 tpi) maximum protrusion: 5.1 mm (see Figure 25: Manta CS-Mount dimensions on page 52) **Note** **Maximum protrusion** means the distance from lens flange to the glass filter in the camera.
ADC	14 bit
Pixel format	**Only b/w:** Mono8, Mono12Packed, Mono16 **Only color:** Bayer8, Bayer12Packed, Bayer16, Mono8, RGB24, YUV411, YUV422, YUV444, BGR24 **Note** Depending on the used viewer: Raw8, Raw16 may be displayed instead of Bayer8, Bayer16, meaning the same.
Frame rates	Up to 14 fps (*30 fps)
Gain control	Manual: 0-31 dB (1 dB/step); auto gain (select. ROI)
Exposure time	51 (*10) µs ... 60 s; auto shutter (select. ROI)
External trigger event	Rising edge, falling edge, any edge, level high, level low
External trigger delay	0 to 60 seconds in 1 µs increments
Fixed rate control	1 fps ... max. frame rate (steps of 0.1 fps)
Imaging modes	Free-running, external trigger, fixed rate, software trigger
Sync Out modes	Trigger ready, trigger input, exposing, readout, imaging, strobe, GPO
Internal image memory	32 MByte, up to 16 frames **Note** The number of frames (StreamHoldCapacity) depends on resolution and pixel format. Listed number of frames is typical for full resolution and Mono8/Bayer8.

Table 9: Specification Manta G-201B/C (*:-30fps)

Feature	Specification
Smart functions	AGC (auto gain control), auto exposure control, 32 MByte image memory, binning (monochrome binning, also for color cameras; but no color binning), decimation (sub-sampling), 5 config files (user sets) **only color:** auto white balance, color correction, edge filter (sharpness), hue, saturation
I/O	Two configurable optocoupled inputs, two configurable optocoupled outputs RS232 port (serial port)
Digital interface	IEEE 802.3 1000BASE-T (GigE Vision V1.2)
Camera control interface	GenICam V1.0 compliant
Power requirements	DC 8 V - 30 V only via 12-pin HIROSE: **external power supply needed** or **PoE** models: Power over Ethernet IEEE 802.3at compliant
Power consumption	Typical <3.6 (4.6*) watt (@ 12 V DC); **PoE:** typical < 3.8 (4.5*) watt (maximal frame rates at full resolution)
Dimensions	86.4 mm x 44 mm x 29 mm (L x W x H); incl. connectors, without tripod and lens
Mass	<200 g (without lens); **PoE:** <220 g (without lens)
Operating temperature	+ 5 °C ... + 45 °C ambient temperature (without condensation)
Storage temperature	- 10 °C ... + 70 °C ambient temperature (without condensation)
Regulations	CE, FCC Class B, RoHS (2002/95/EC), PoE IEEE 802.3at
Standard accessories	**b/w:** protection glass **color:** IR cut filter
Optional accessories	**b/w:** IR cut filter, IR pass filter **color:** protection glass Tripod adapter
On request	Gigabit Ethernet network card, Gigabit Ethernet network cables
Software packages	AVT Universal Package, AVT PvAPI SDK (no charge for either package)

Table 9: Specification Manta G-201B/C (*:-30fps)

Note

The design and specifications for the products described above may change without notice.

Caution

Due to the small packaging and high speed of the Manta cameras, take special care to maintain a reasonable operating temperature.
If the camera is to be operated in a warm environment:

- **Mount the camera on a heat sink such as a metal bracket.**
- Take care that there is **sufficient air flow**.

Manta G-504B/C

Feature	Specification
Image device	Type 2/3 (diag. 11 mm) progressive scan SONY IT CCD ICX655AL/AQ with Super HAD microlens
Effective chip size	**8.5 mm x 7.1 mm**
Cell size	3.45 µm x 3.45 µm
Picture size (max.)	2452 x 2056 pixels
Lens mount	C-Mount: 17.526 mm (in air); Ø 25.4 mm (32 tpi) maximum protrusion: 9.7 mm (see Figure 24: Manta C-Mount dimensions on page 51) CS-Mount: 12.526 mm (in air); Ø 25.4 mm (32 tpi) maximum protrusion: 5.1 mm (see Figure 25: Manta CS-Mount dimensions on page 52) **Note** **Maximum protrusion** means the distance from lens flange to the glass filter in the camera.
ADC	14 bit
Pixel format	**Only b/w:** Mono8, Mono12Packed, Mono16 **Only color:** Bayer8, Bayer12Packed, Bayer16, Mono8, RGB24, YUV411, YUV422, YUV444, BGR24 **Note** Depending on the used viewer: Raw8, Raw16 may be displayed instead of Bayer8, Bayer16, meaning the same.
Frame rates	Up to 9 fps
Gain control	Manual: 0-32 dB (1 dB/step); auto gain (select. ROI)
Exposure time	38 µs ... 60 s; auto shutter (select. ROI)
External trigger event	**Rising edge, falling edge, any edge, level high, level low**
External trigger delay	**0 to 60 seconds in 1 µs increments**
Fixed rate control	**1 fps ... max. frame rate (steps of 0.1 fps)**
Imaging modes	Free-running, external trigger, fixed rate, software trigger
Sync Out modes	Trigger ready, trigger input, exposing, readout, imaging, strobe, GPO
Internal image memory	32 MByte, up to 6 frames **Note** The number of frames (StreamHoldCapacity) depends on resolution and pixel format. Listed number of frames is typical for full resolution and Mono8/Bayer8.

Table 10: Specification Manta G-504B/C

Feature	Specification
Smart functions	AGC (auto gain control), auto exposure control, 32 MByte image memory, binning (monochrome binning, also for color cameras; but no color binning), decimation (sub-sampling), 5 config files (user sets) **only color:** auto white balance, color correction, edge filter (sharpness), hue, saturation
I/O	Two configurable optocoupled inputs, two configurable optocoupled outputs RS232 port (serial port)
Digital interface	IEEE 802.3 1000BASE-T (GigE Vision V1.2)
Camera control interface	GenICam V1.0 compliant
Power requirements	DC 8 V - 30 V only via 12-pin HIROSE: **external power supply needed** or **PoE** models: Power over Ethernet IEEE 802.3at compliant
Power consumption	Typical <3.9 watt (@ 12 V DC); **PoE:** typical <3.9 watt (maximal frame rates at full resolution)
Dimensions	86.4 mm x 44 mm x 29 mm (L x W x H); incl. connectors, without tripod and lens
Mass	<200 g (without lens); **PoE:** <220 g (without lens)
Operating temperature	+ 5 °C ... + 45 °C ambient temperature (without condensation)
Storage temperature	- 10 °C ... + 70 °C ambient temperature (without condensation)
Regulations	CE, FCC Class B, RoHS (2002/95/EC), PoE IEEE 802.3at
Standard accessories	**b/w:** protection glass **color:** IR cut filter
Optional accessories	**b/w:** IR cut filter, IR pass filter **color:** protection glass Tripod adapter
On request	Gigabit Ethernet network card, Gigabit Ethernet network cables
Software packages	AVT Universal Package, AVT PvAPI SDK (no charge for either package)

Table 10: Specification Manta G-504B/C

Note

The design and specifications for the products described above may change without notice.

Caution

Due to the small packaging and high speed of the Manta cameras, take special care to maintain a reasonable operating temperature.
If the camera is to be operated in a warm environment:

- **Mount the camera on a heat sink such as a metal bracket.**
- Take care that there is **sufficient air flow**.

Spectral sensitivity

Note

All measurements were done without protection glass / without filter.

The uncertainty in measurement of the QE values is ±10%.

This is due to:

- Manufacturing tolerance of the sensor
- Uncertainties in the measuring apparatus itself (Ulbricht-Kugel/Ulbricht sphere, optometer, etc.)

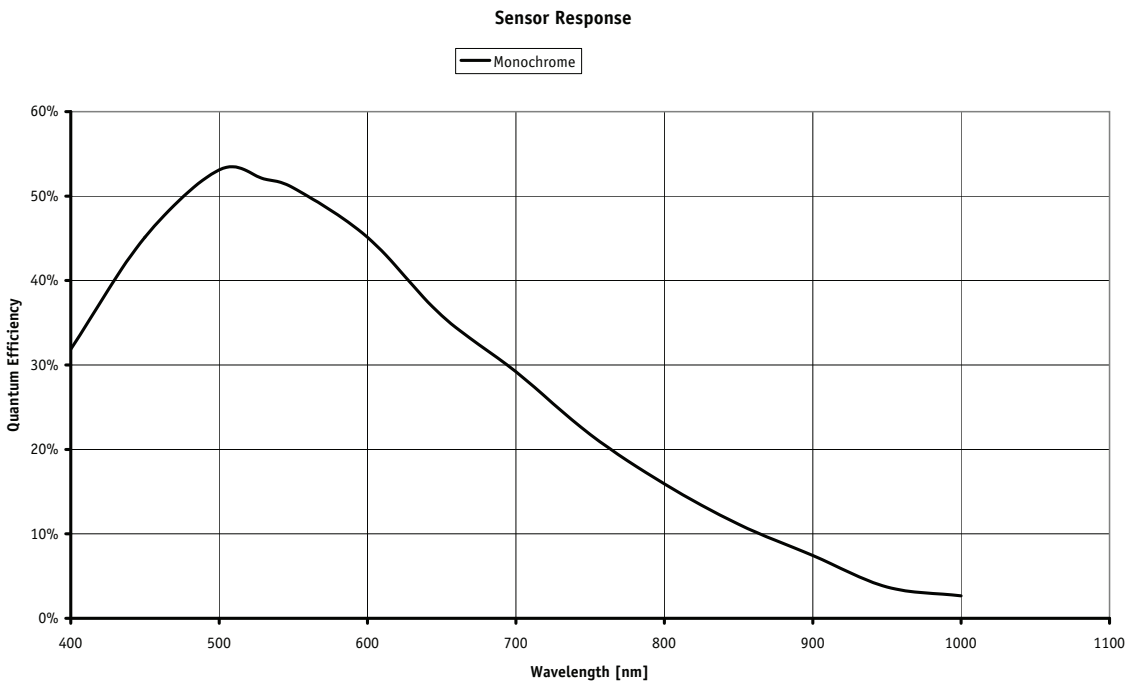

Figure 1: Spectral sensitivity of Manta G-032B

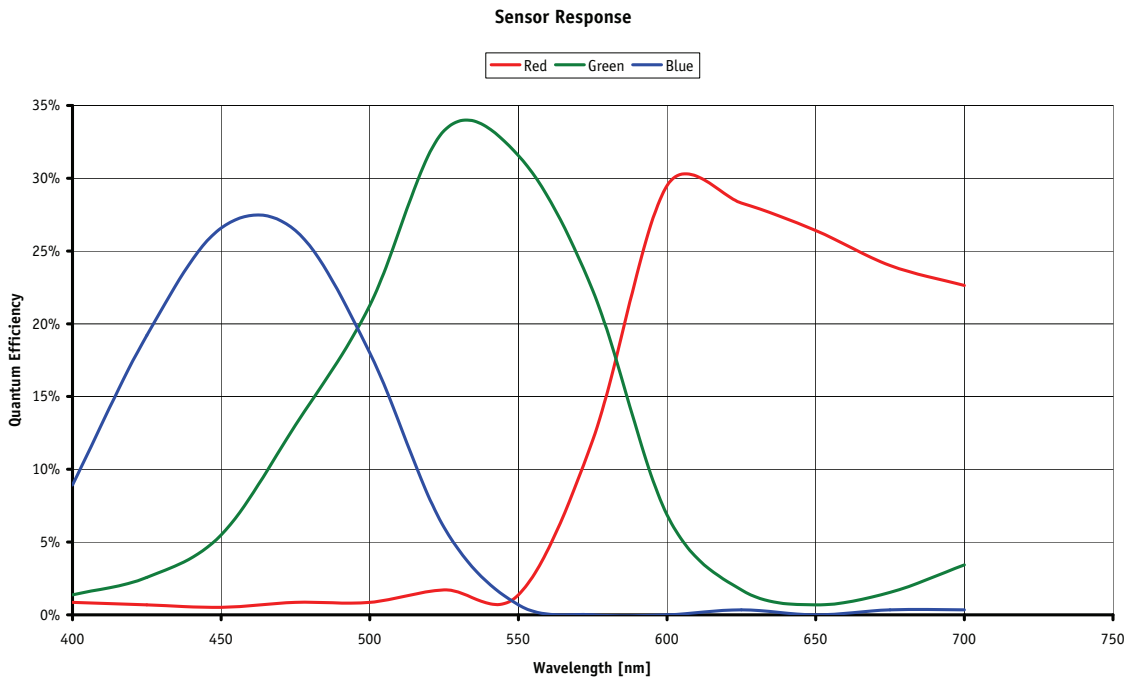

Figure 2: Spectral sensitivity of Manta G-032C (without IR cut filter)

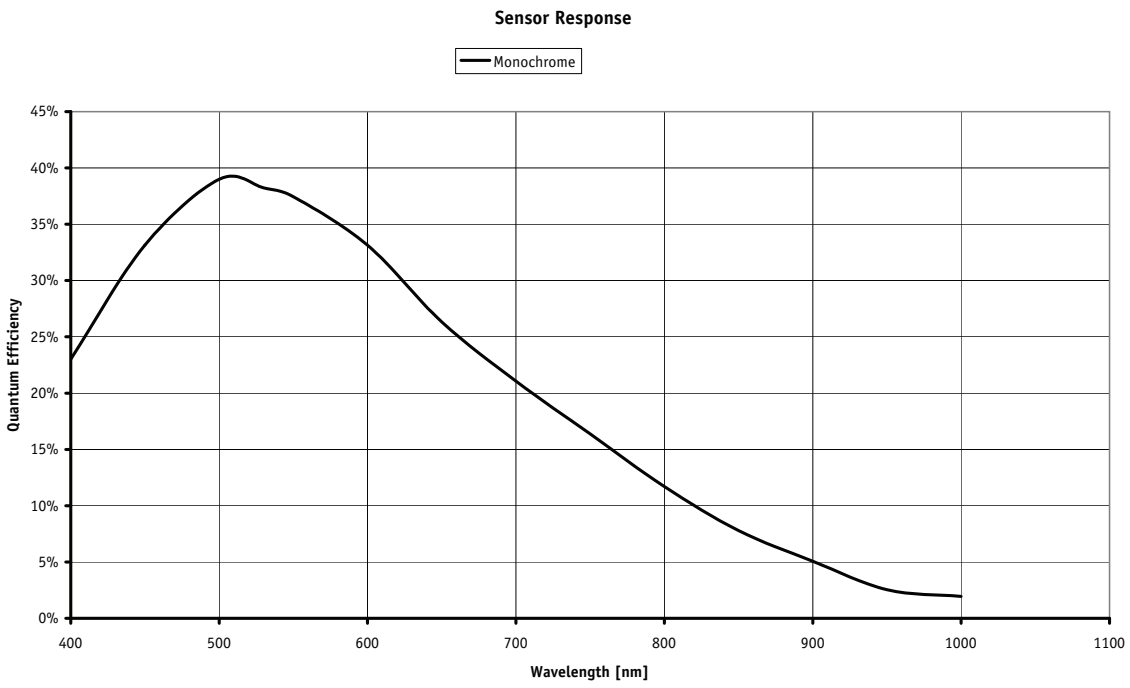

Figure 3: Spectral sensitivity of Manta G-033B

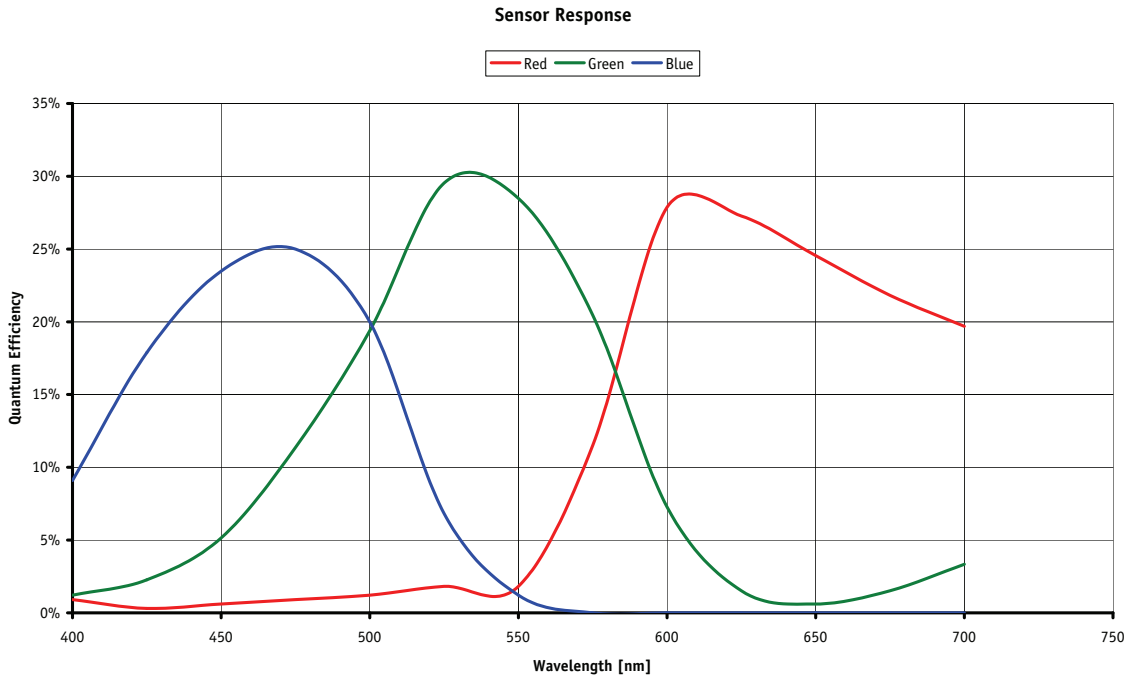

Figure 4: Spectral sensitivity of Manta G-033C (without IR cut filter)

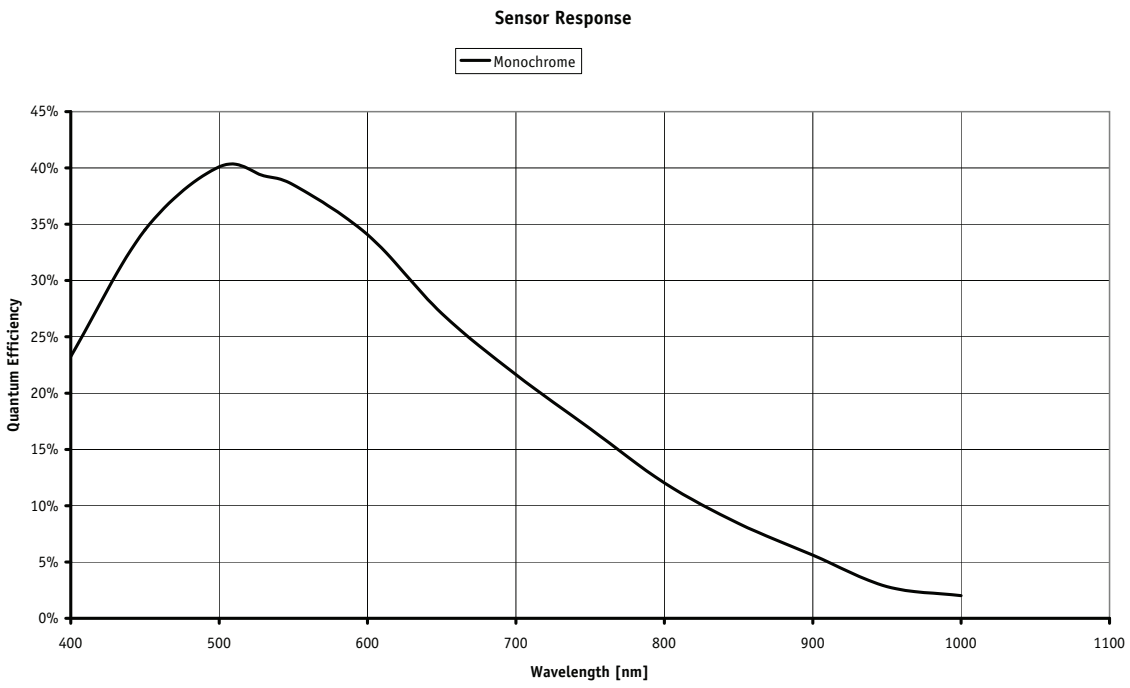

Figure 5: Spectral sensitivity of Manta G-046B

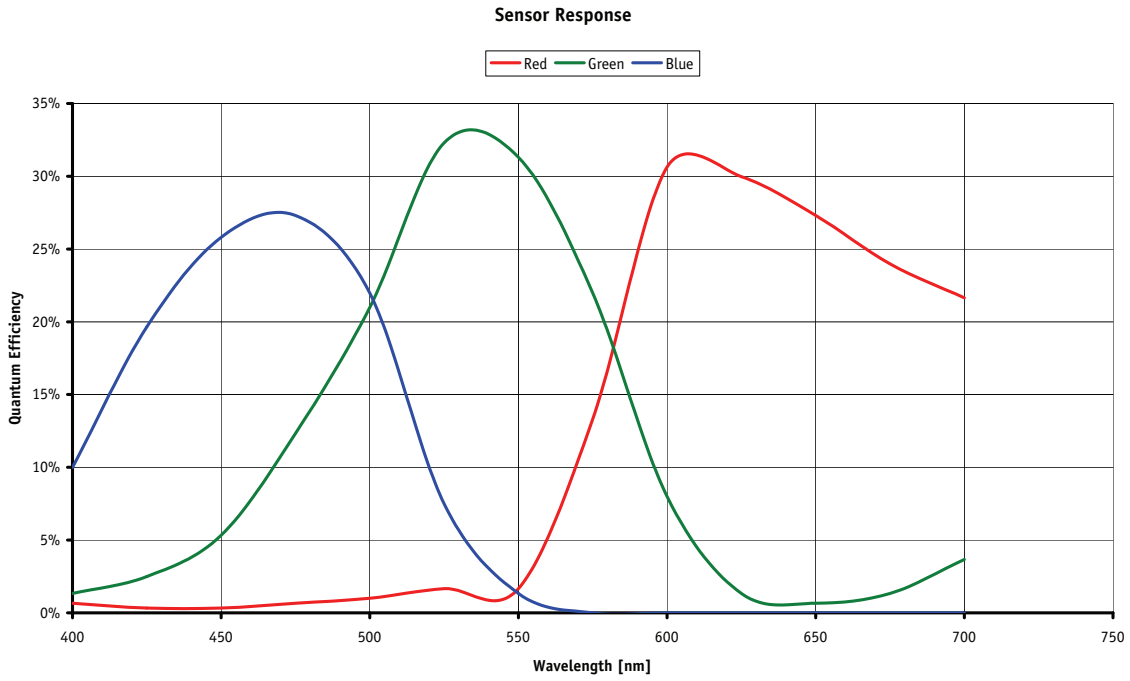

Figure 6: Spectral sensitivity of Manta G-046C (without IR cut filter)

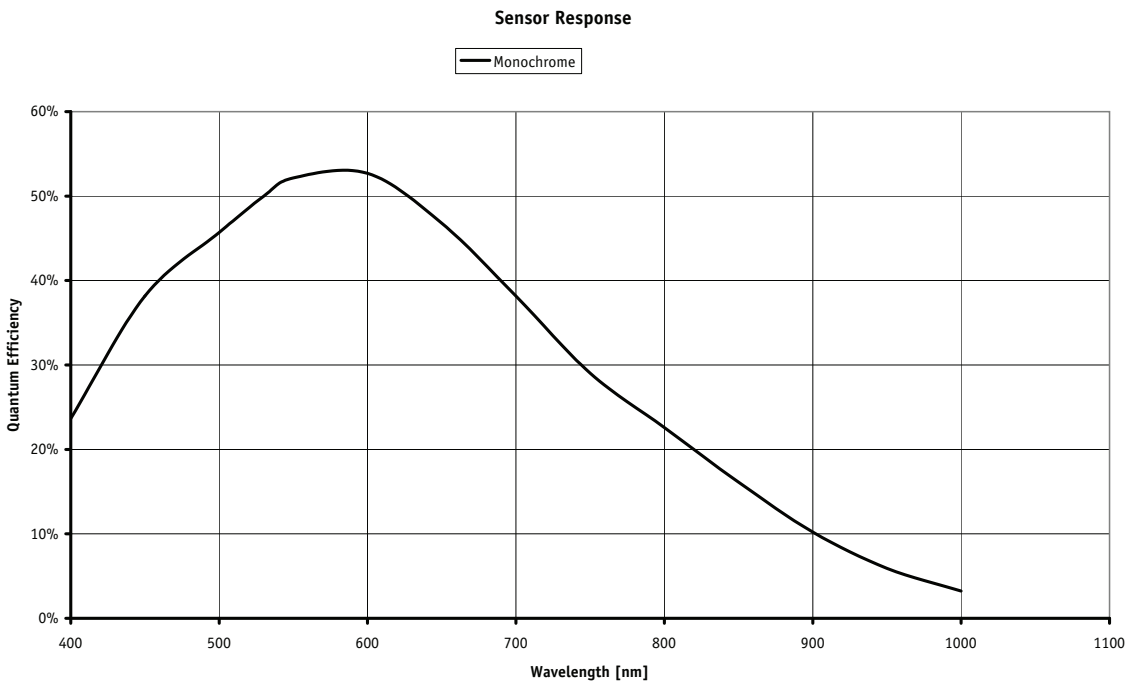

Figure 7: Spectral sensitivity of Manta G-125B

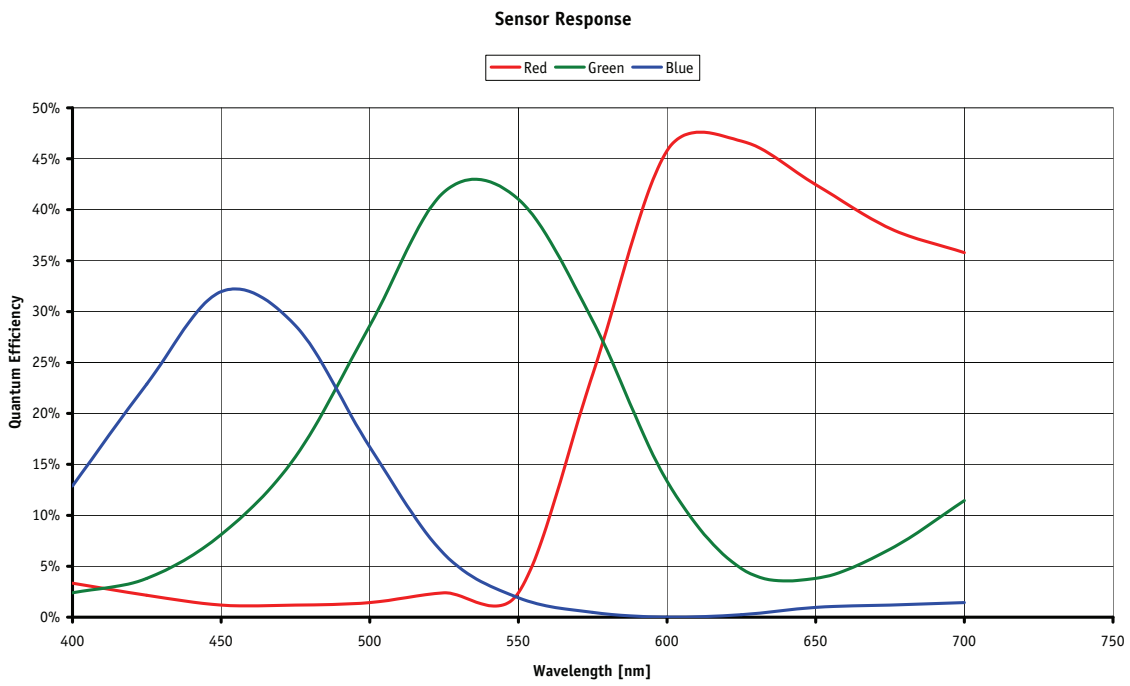

Figure 8: Spectral sensitivity of Manta G-125C (without IR cut filter)

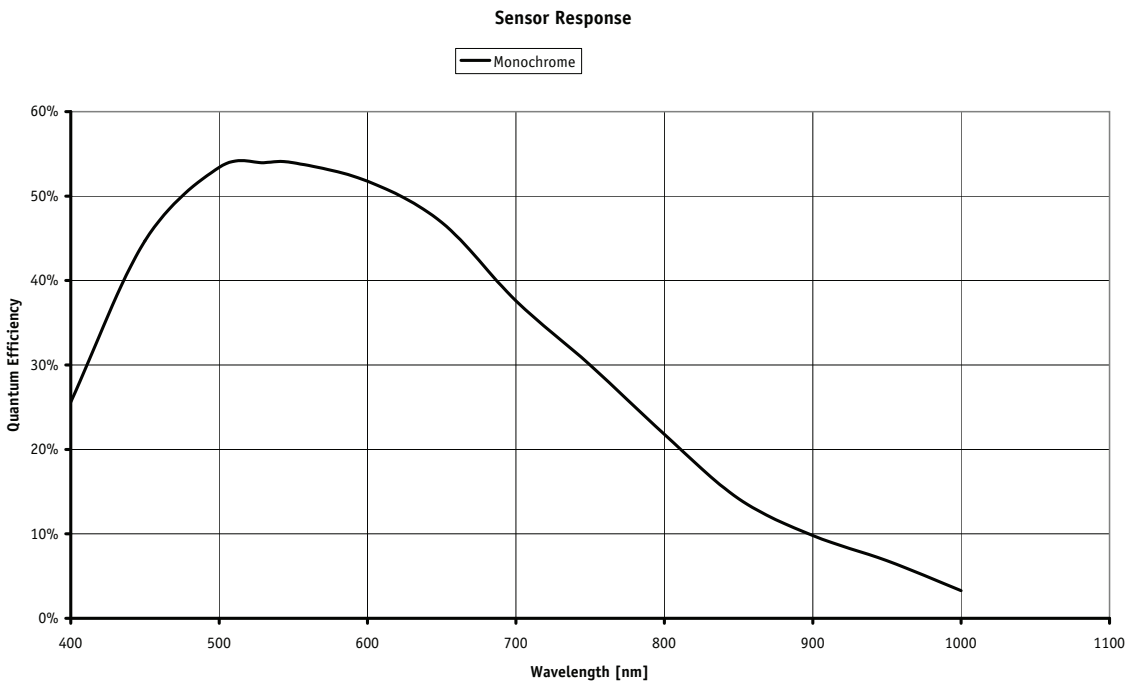

Figure 9: Spectral sensitivity of Manta G-145B

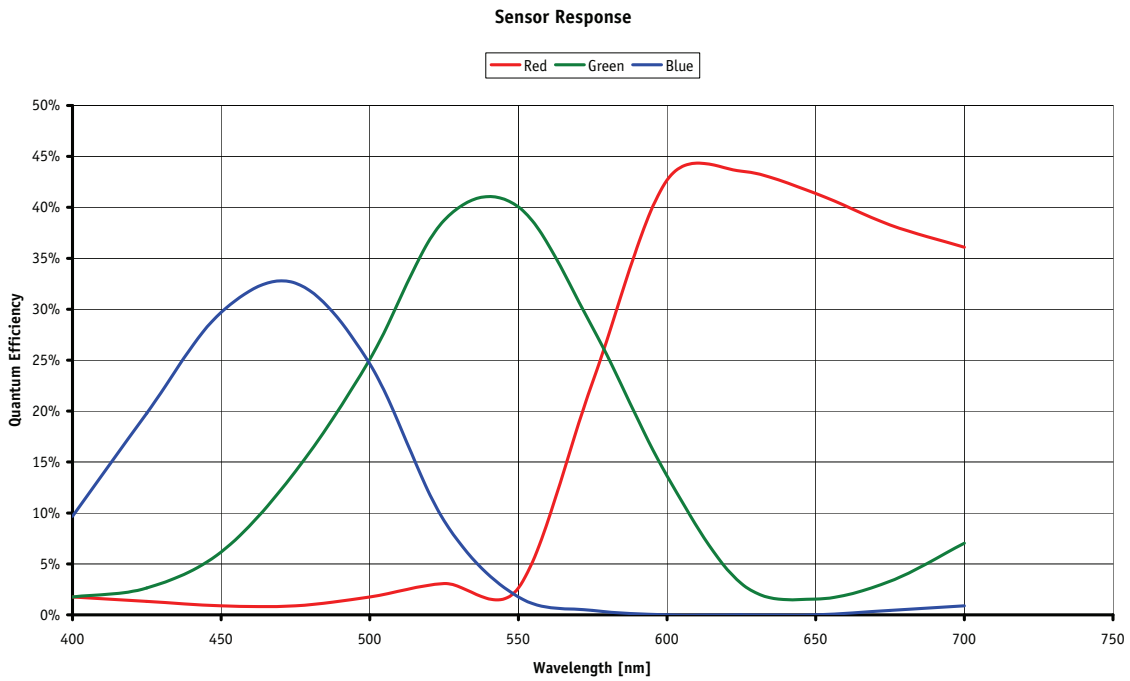

Figure 10: Spectral sensitivity of Manta G-145C (without IR cut filter)

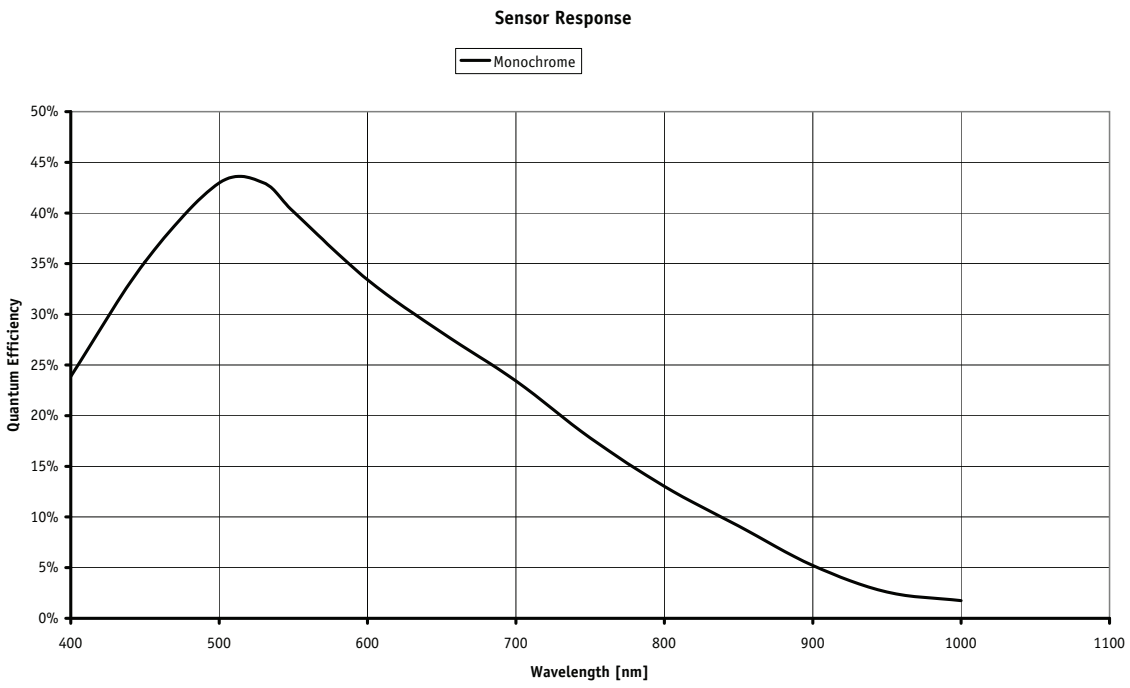

Figure 11: Spectral sensitivity of Manta G-146B

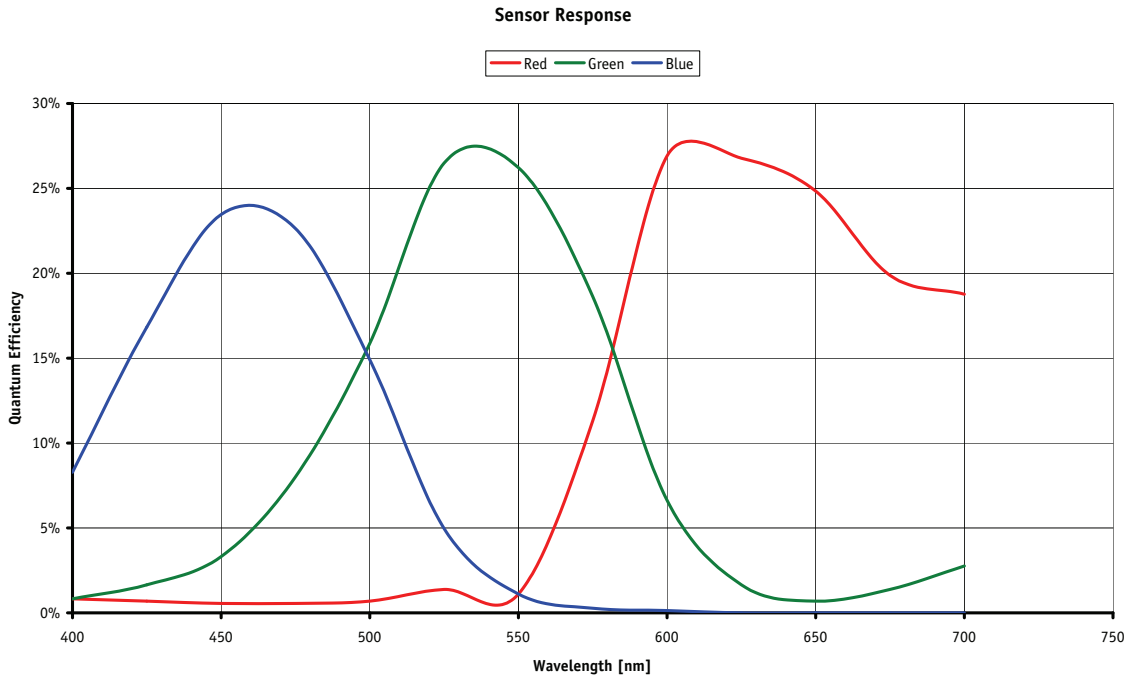

Figure 12: Spectral sensitivity of Manta G-146C (without IR cut filter)

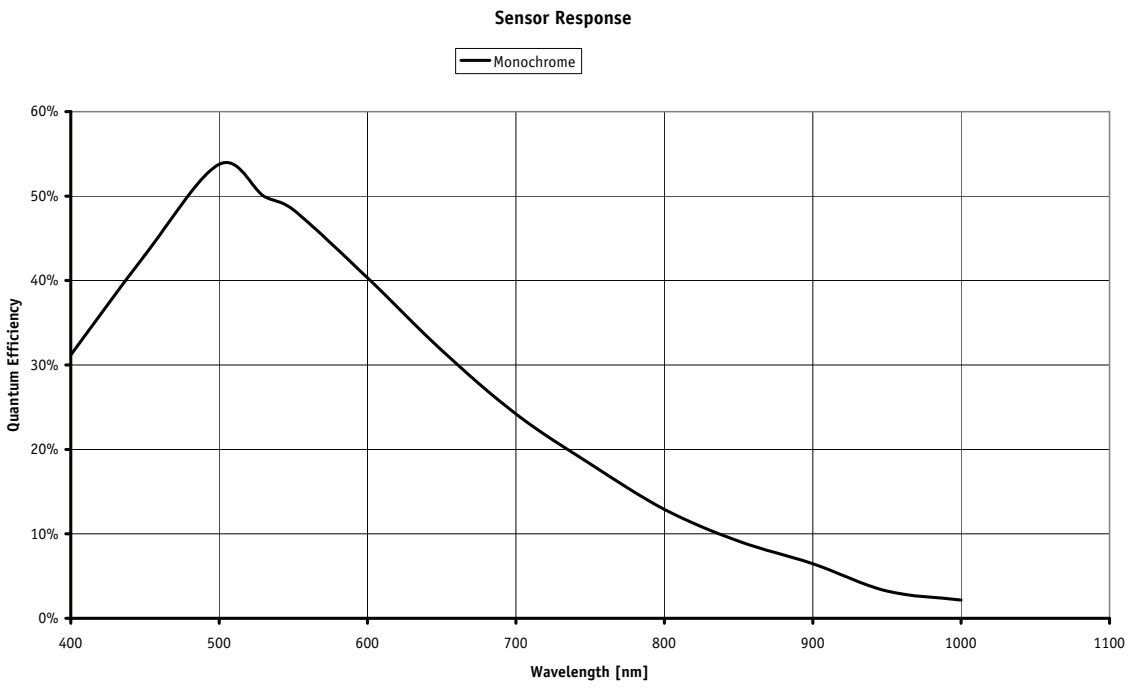

Figure 13: Spectral sensitivity of Manta G-201B

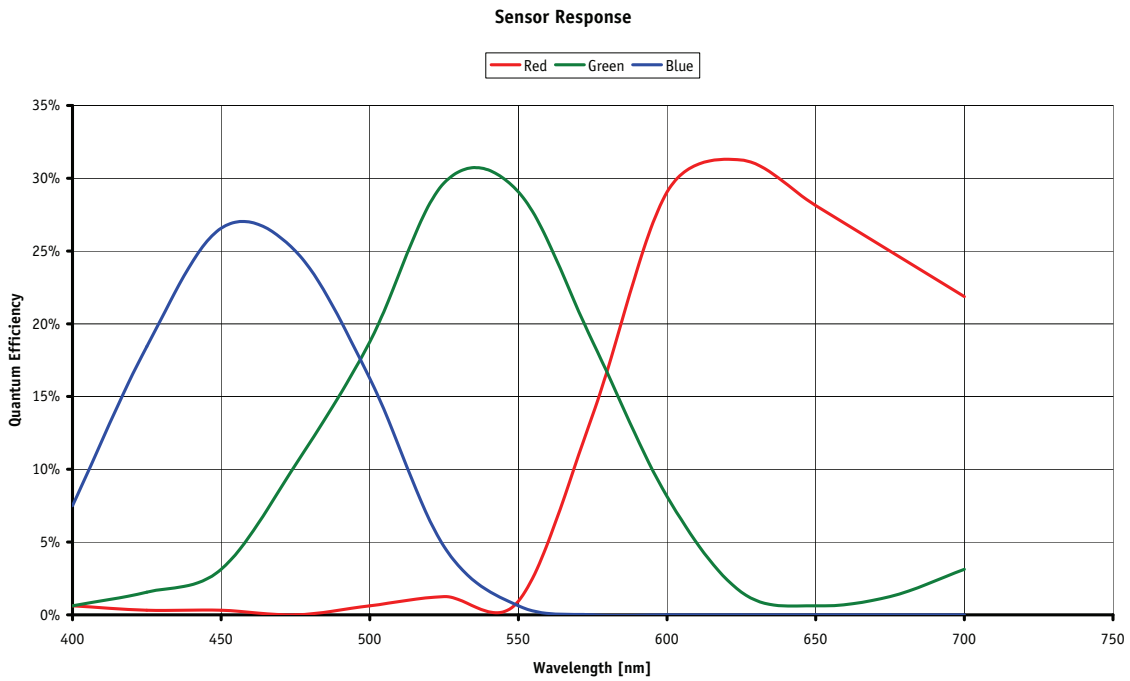

Figure 14: Spectral sensitivity of Manta G-201C (without IR cut filter)

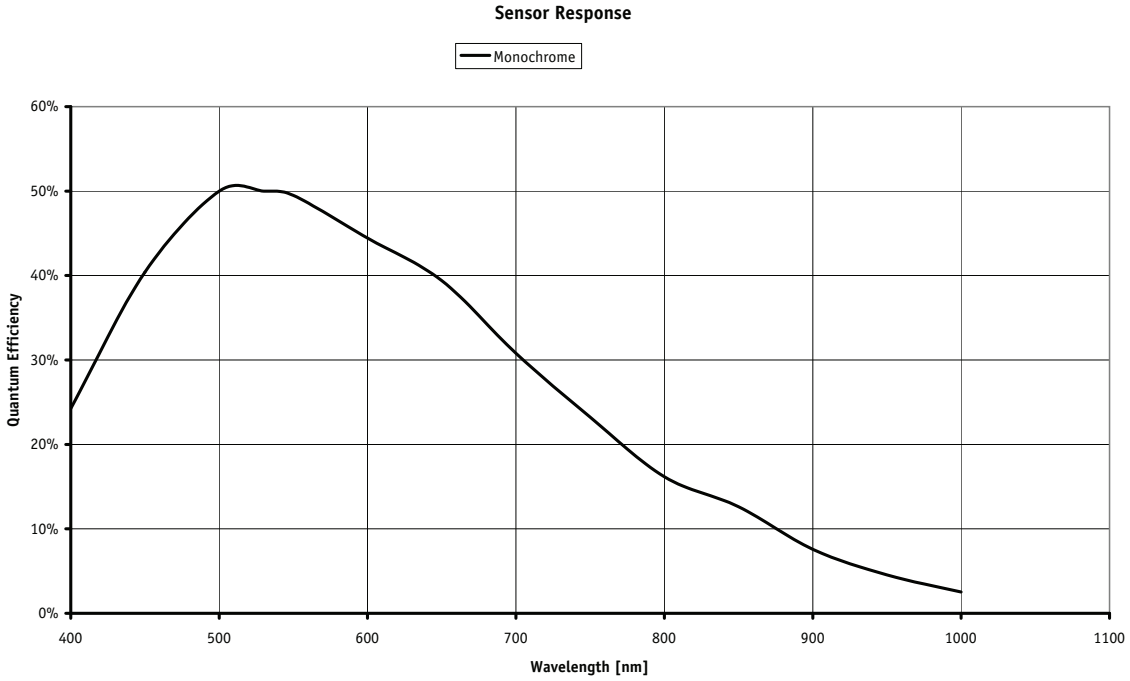

Figure 15: Spectral sensitivity of Manta G-504B

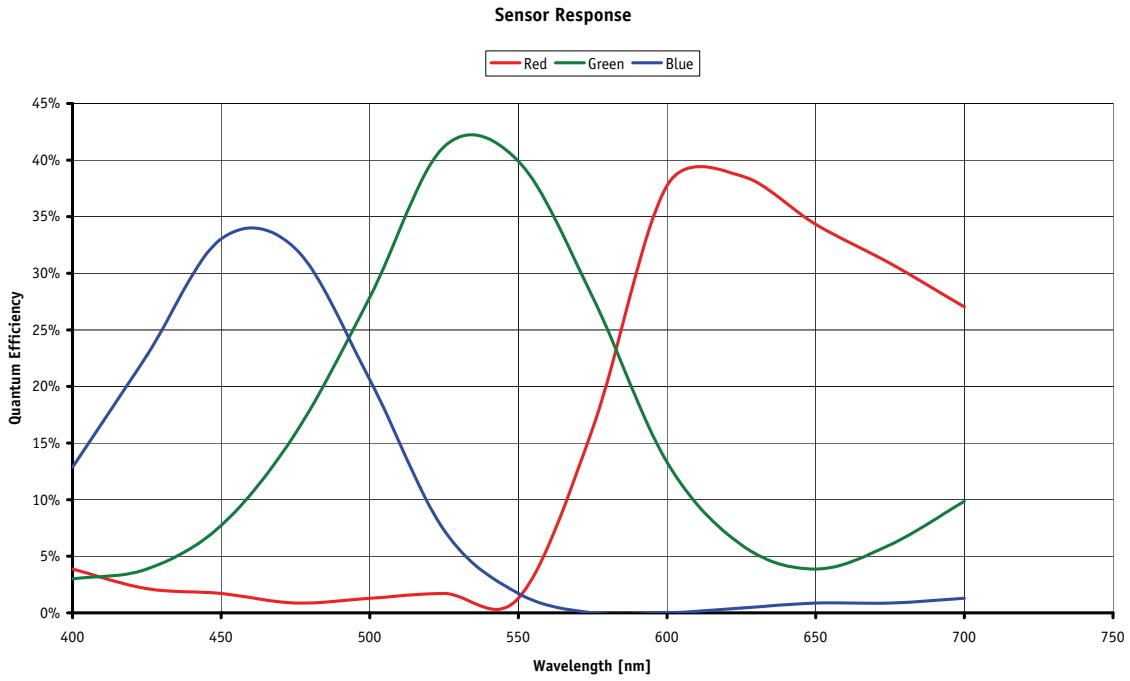

Figure 16: Spectral sensitivity of Manta G-504C (without IR cut filter)

Filter and lenses

- **Monochrome** cameras are equipped with **protection glass**.
- **Color** cameras are equipped with **IR cut filter**.

IR cut filter: spectral transmission

The following illustration shows the spectral transmission of the IR cut filter:

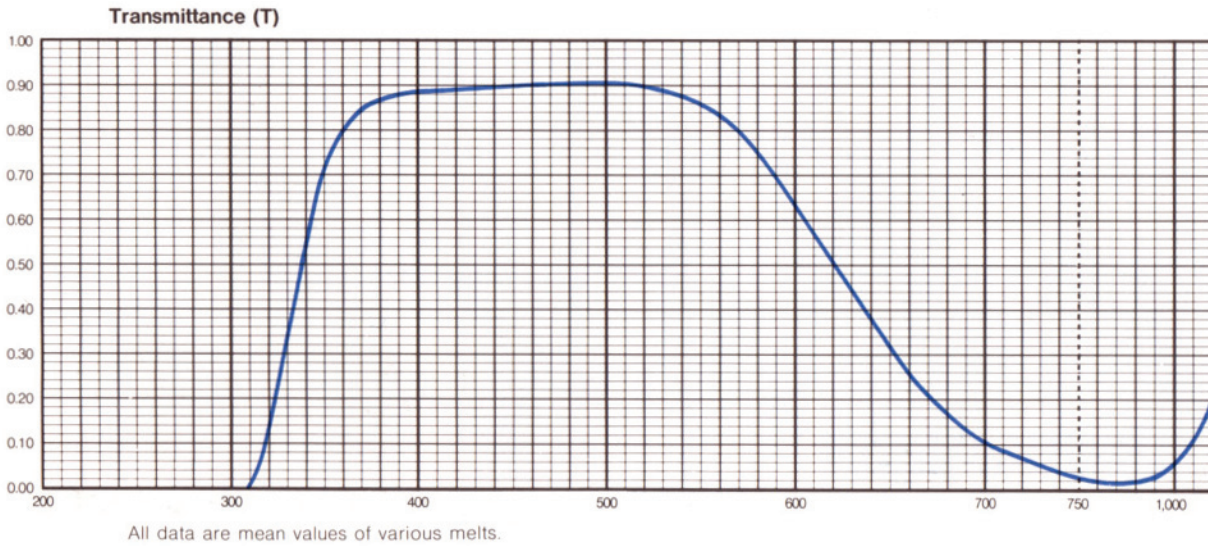

Figure 17: Spectral transmission of Hoya C5000

Camera lenses

AVT offers different lenses from a variety of manufacturers.

www

For more information go to:

http://www.alliedvisiontec.com/emea/products/accessories/lenses.html

Here you find suitable lenses for AVT camera families and models.

The following table lists selected image formats in **width x height** depending on camera type, distance and the focal length of the lens.

Note

Lenses with focal lengths < 8 mm may show shading in the edges of the image due to microlenses on the sensor's pixel.

Ask your dealer if you require non C-Mount lenses.

Focal length for type 1/3 sensors Manta G-032/125	Distance = 500 mm	Distance = 1000 mm
4.8 mm	495 mm x 371 mm	995 mm x 746 mm
8 mm	295 mm x 221 mm	595 mm x 446 mm
12 mm	195 mm x 146 mm	395 mm x 296 mm
16 mm	145 mm x 109 mm	295 mm x 221 mm
25 mm	91 mm x 68 mm	187 mm x 140 mm
35 mm	64 mm x 48 mm	132 mm x 99 mm
50 mm	43 mm x 32 mm	91 mm x 68 mm

Table 11: Focal length vs. field of view (Manta G-032/125)

Focal length for type 1/2 sensors Manta G-033/046/146	Distance = 500 mm	Distance = 1000 mm
4.8 mm	660 mm x 495 mm	1327 mm x 995 mm
8 mm	394 mm x 295 mm	794 mm x 595 mm
12 mm	260 mm x 195 mm	527 mm x 395 mm
16 mm	194 mm x 145 mm	394 mm x 295 mm
25 mm	122 mm x 91 mm	250 mm x 187 mm
35 mm	85 mm x 64 mm	176 mm x 132 mm
50 mm	58 mm x 43 mm	122 mm x 91 mm

Table 12: Focal length vs. field of view (Manta G-033/046/146)

Focal length for type 1/1.8 sensors Manta G-201	Distance = 500 mm	Distance = 1000 mm
4.8 mm	740 mm x 549 mm	1488 mm x 1103 mm
8 mm	441 mm x 327 mm	890 mm x 660 mm
12 mm	292 mm x 216 mm	591 mm x 438 mm
16 mm	217 mm x 161 mm	441 mm x 327 mm
25 mm	136 mm x 101 mm	280 mm x 207 mm
35 mm	95 mm x 71 mm	198 mm x 147 mm
50 mm	65 mm x 48 mm	136 mm x 101 mm

Table 13: Focal length vs. field of view (Manta G-201)

Focal length for type 2/3 sensors Manta G-145/504	Distance = 500 mm	Distance = 1000 mm
4.8 mm	908 mm x 681 mm	1825 mm x 1368 mm
8 mm	541 mm x 406 mm	1091 mm x 818 mm
12 mm	358 mm x 268 mm	725 mm x 543 mm
16 mm	266 mm x 200 mm	541 mm x 406 mm
25 mm	167 mm x 125 mm	343 mm x 257 mm
35 mm	117 mm x 88 mm	243 mm x 182 mm
50 mm	79 mm x 59 mm	167 mm x 125 mm

Table 14: Focal length vs. field of view (Manta G-145/504)

Camera dimensions

Note

For information on **sensor position accuracy:**

(sensor shift x/y, optical back focal length z and sensor rotation α) see Chapter Sensor position accuracy of AVT Manta cameras on page 88.

Note

The modular concept exists also of PoE variants with upside down GigE plug. These variants are not listed in this chapter.

MANTA standard housing (1 x GigE)

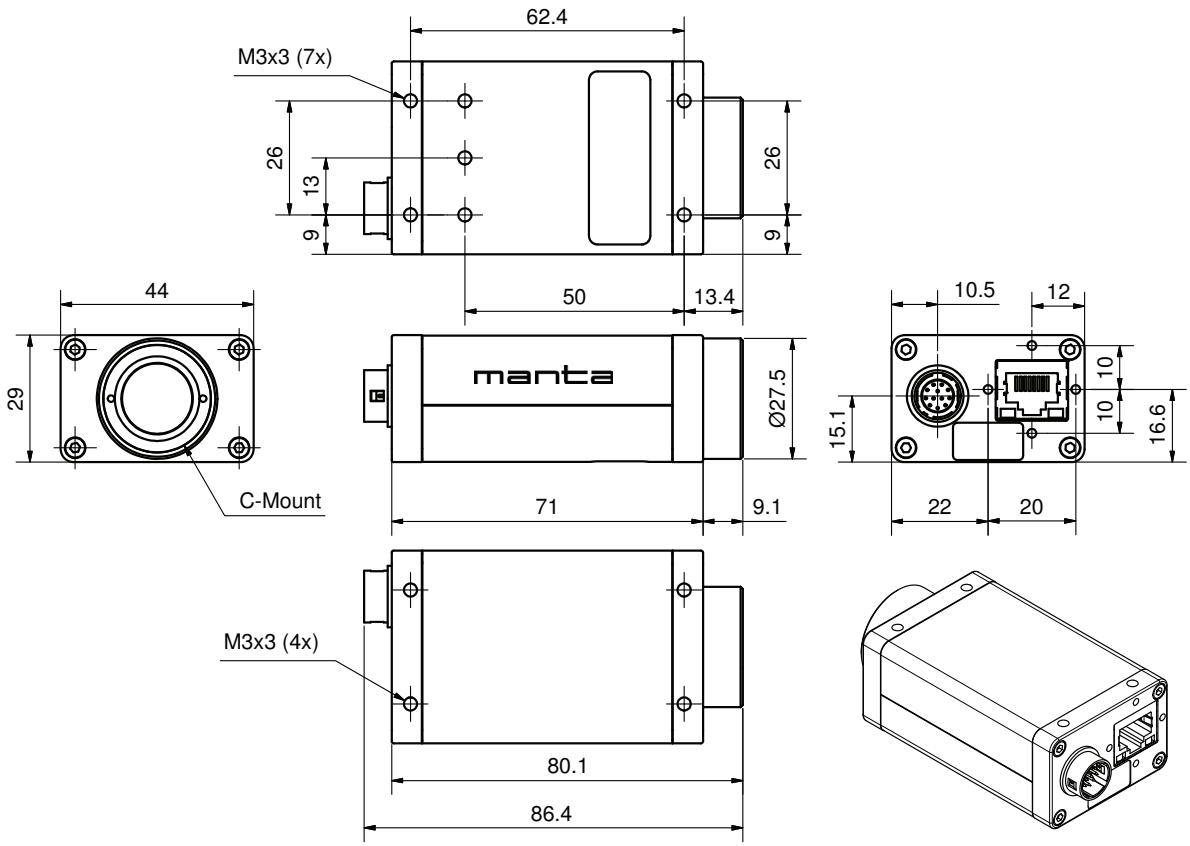

Figure 18: Camera dimensions

Tripod adapter

This five hole tripod adapter (AVT order number E 5000007) ...

- ... can be used for Manta as well as for Stingray and Marlin.
- ... is only designed for standard housings.

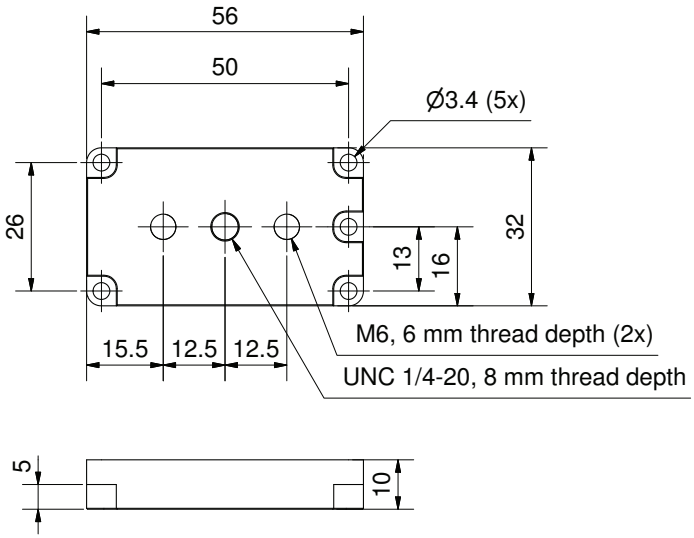

Body size: 56 mm x 32 mm x 10 mm (L x W x H)

Figure 19: Tripod dimensions

Manta W90 (1 x GigE)

This version has the sensor tilted by 90 degrees clockwise, so that it views upwards.

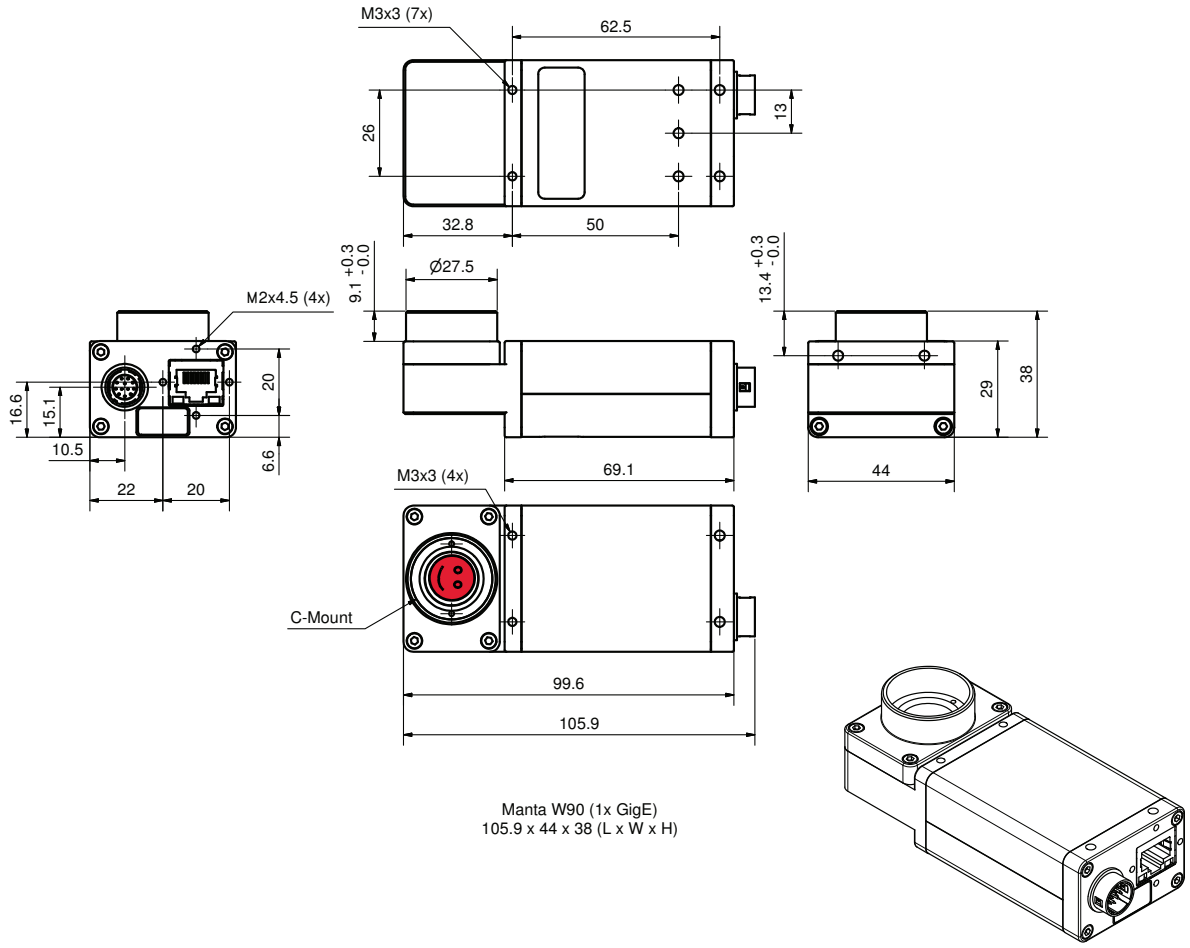

Figure 20: Manta W90 (1 x GigE)

Manta W90 S90 (1 x GigE)

This version has the sensor tilted by 90 degrees clockwise, so that it views upwards.

The sensor is also rotated by 90 degrees clockwise.

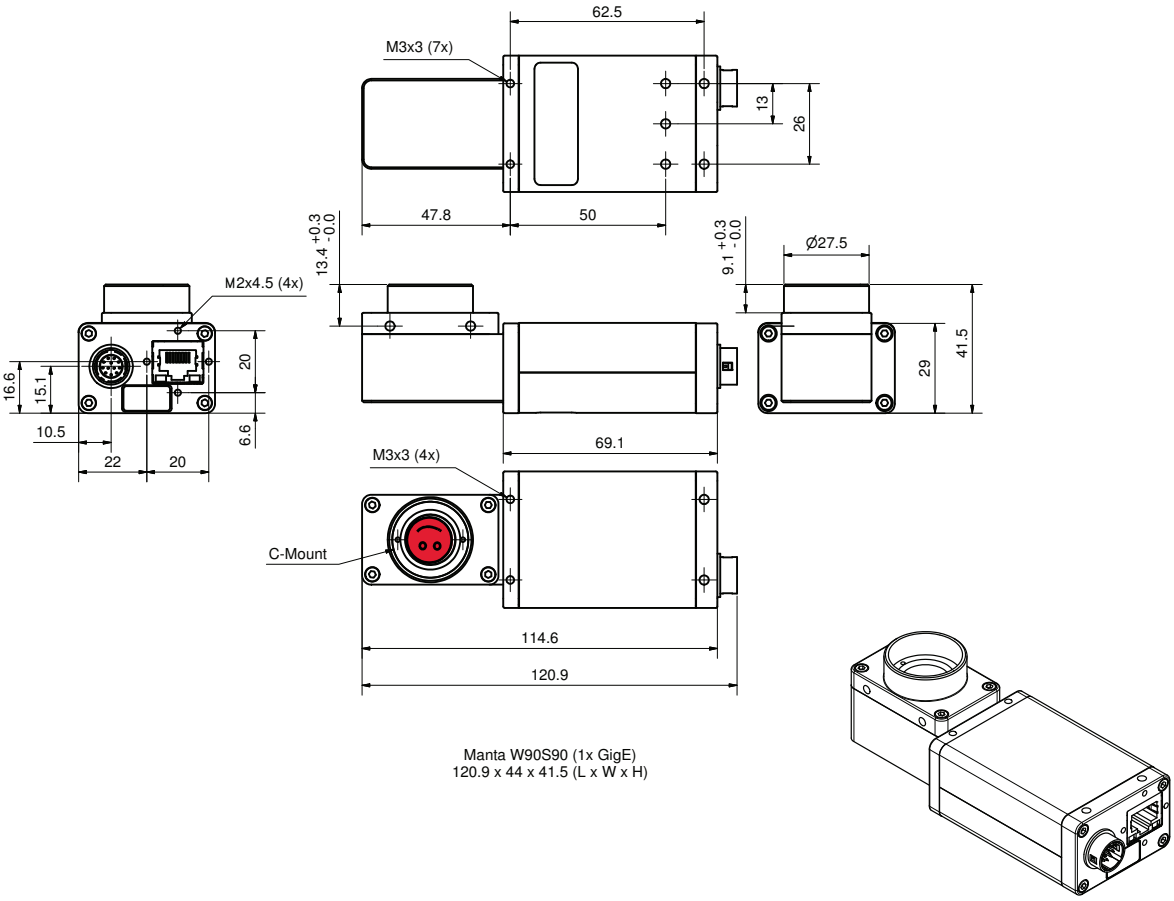

Figure 21: Manta W90 S90 (1 x GigE)

Manta W270 (1 x GigE)

This version has the sensor tilted by 270 degrees clockwise, so that it views downwards.

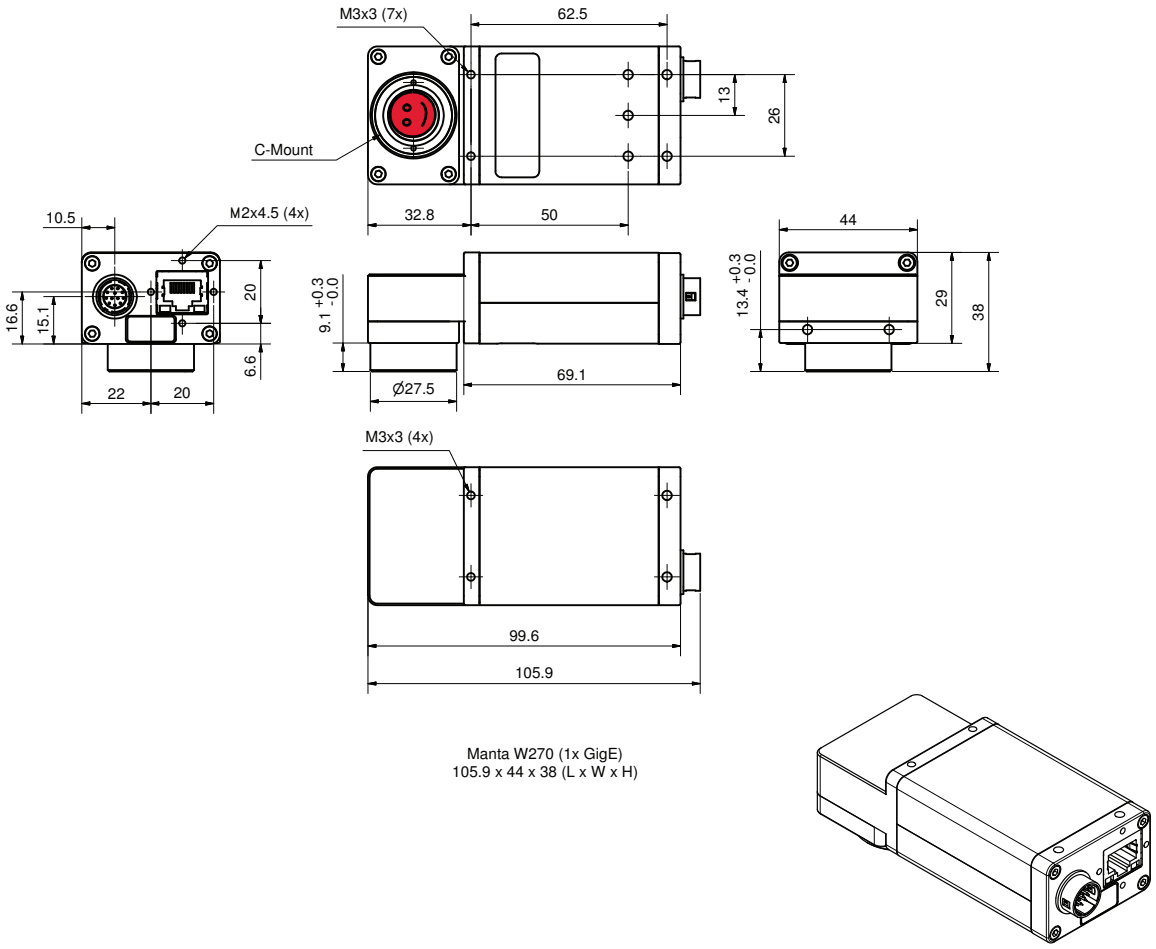

Figure 22: Manta W270 (1 x GigE)

Manta W270 S90 (1 x GigE)

This version has the sensor tilted by 270 degrees clockwise, so that it views downwards.

The sensor is also rotated by 90 degrees clockwise.

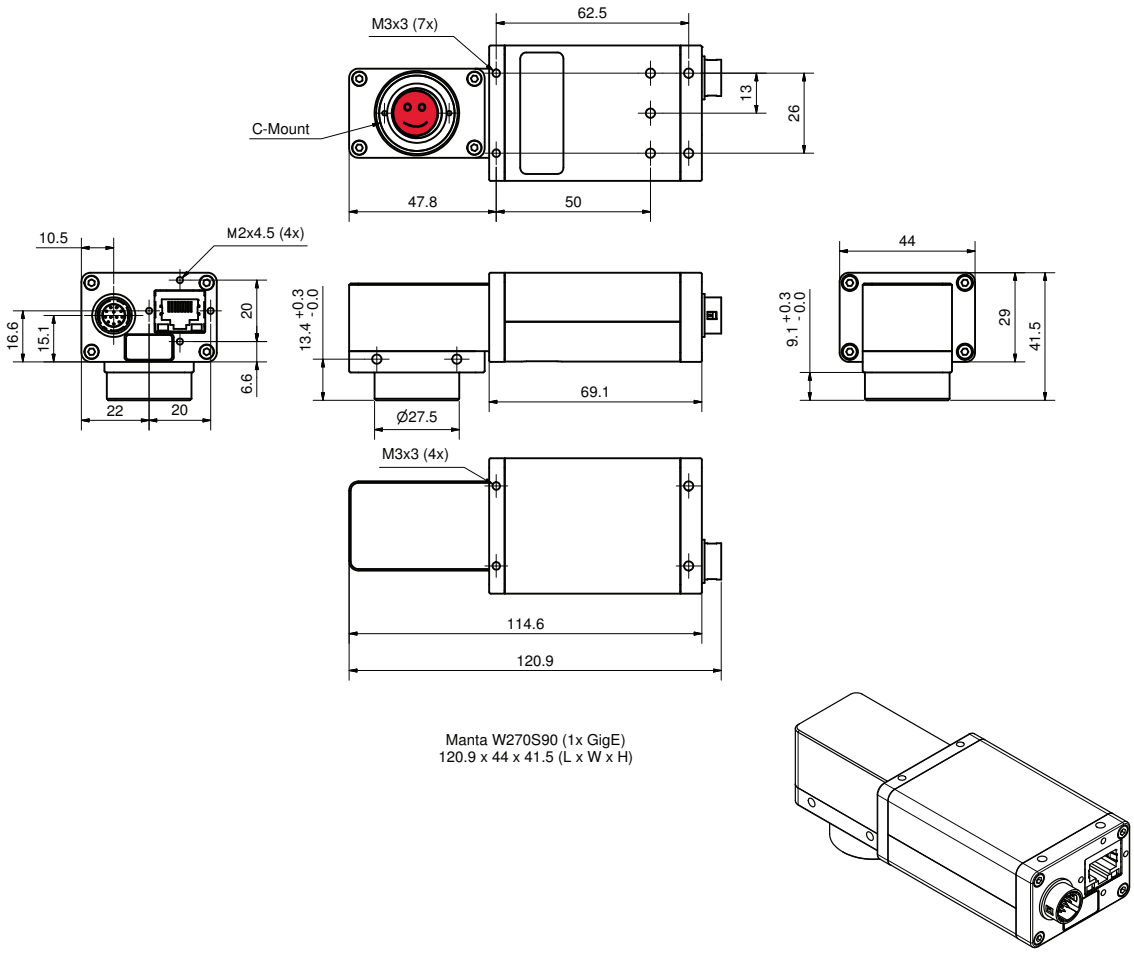

Figure 23: Manta W270 S90 (1 x GigE)

Cross section: C-Mount

- All monochrome Manta cameras are equipped with a protection glass.
- All color Manta cameras are equipped with the same model of IR cut filter.

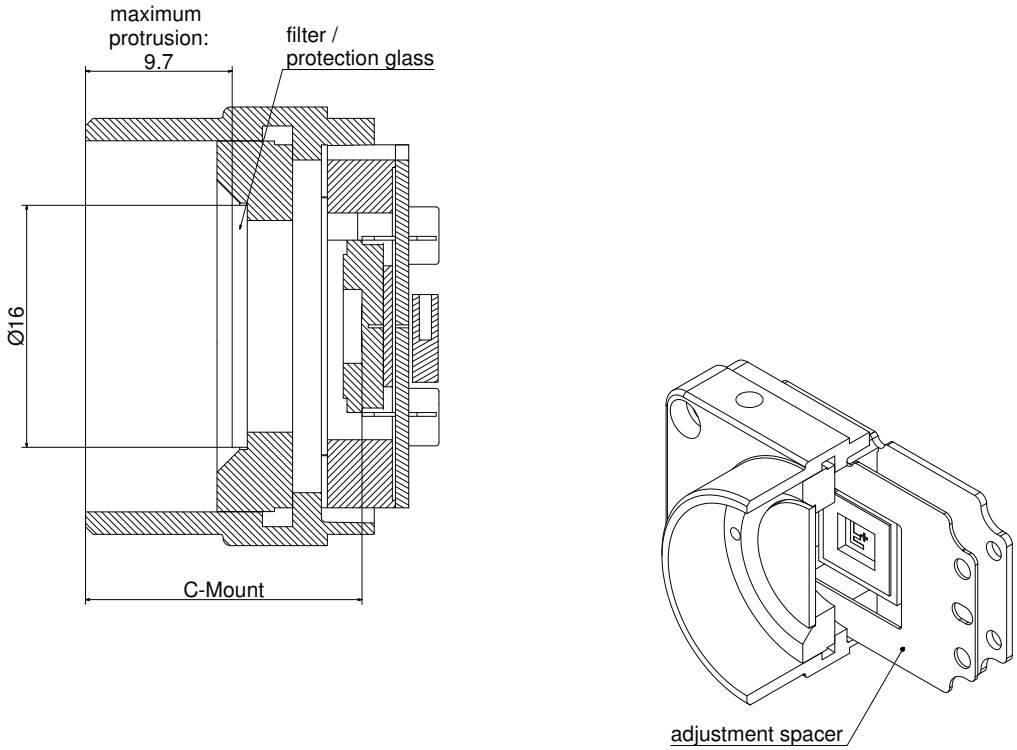

Figure 24: Manta C-Mount dimensions

Adjustment of C-Mount

The dimensional adjustment cannot be done by the customer. All modifications have to be done by the AVT factory.

If you need any modifications, please contact Customer Care: For phone numbers and e-mail:
See Chapter *Contacting Allied Vision Technologies* on page 5.

Cross section: CS-Mount

Choose protection glass or filter according to the
AVT Modular Camera Concept.
http://www.alliedvisiontec.com/emea/support/downloads/product-literature.html

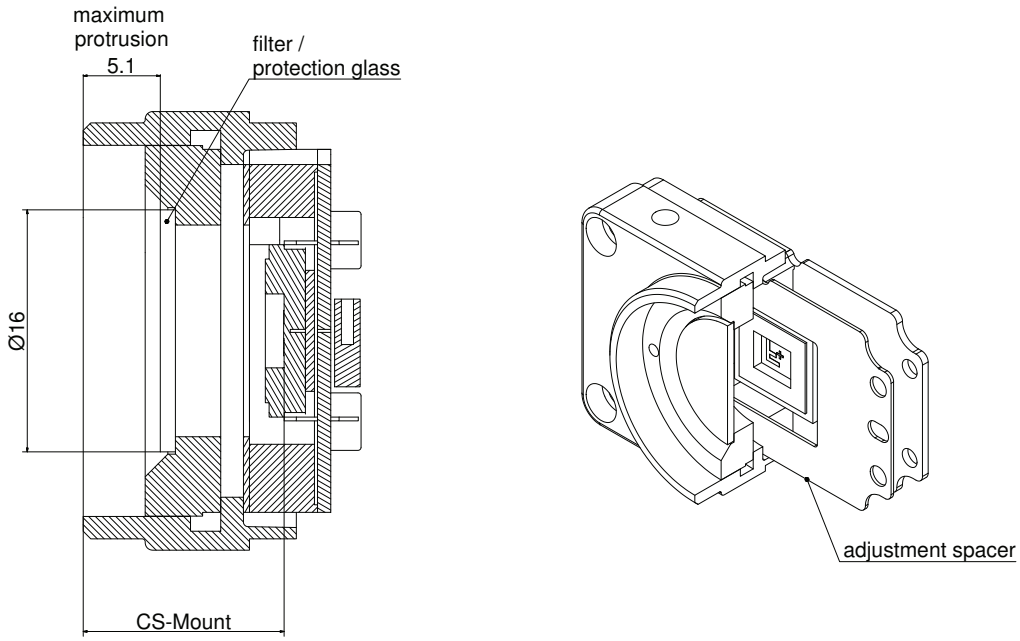

Figure 25: Manta CS-Mount dimensions

Adjustment of CS-Mount

The dimensional adjustment cannot be done by the customer. All modifications have to be done by the AVT factory.

If you need any modifications, please contact Customer Care: For phone numbers and e-mail:
See Chapter *Contacting Allied Vision Technologies* on page 5.

Manta board level (non PoE): dimensions

13-pole I/O connector:
Molex PicoBlade
Vertical Header 53047-1310
Receptacle Housing 51021-1300
Crimp Terminal 13 x 50079-8000

1 = GND
(for RS232, Ext PWR)
2 = Ext PWR input
3 = PWM-Out
4 = Input 1
5 = not used
6 = Output 1
7 = GND (for Inputs)
8 = RxD 9 = TxD
10 = Power Input
(for Output ports)
11 = Input 2
12 = Output 2
13 = Chassis GND

FFC45 cable length:

FFC45 L = 56 mm K7500307
FFC45 L = 110 mm K7500318
FFC45 L = 152 mm 1817
FFC45 L = 200 mm 1824

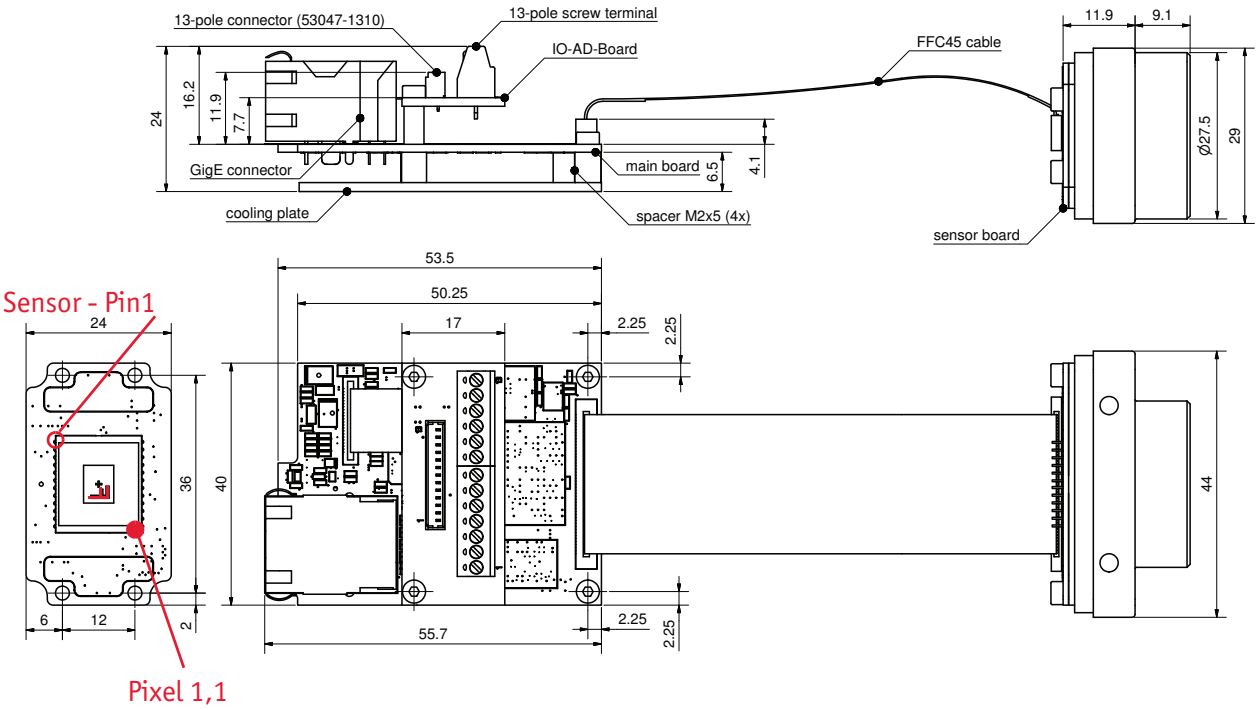

Figure 26: Manta board level dimensions

Manta board level: C-Mount

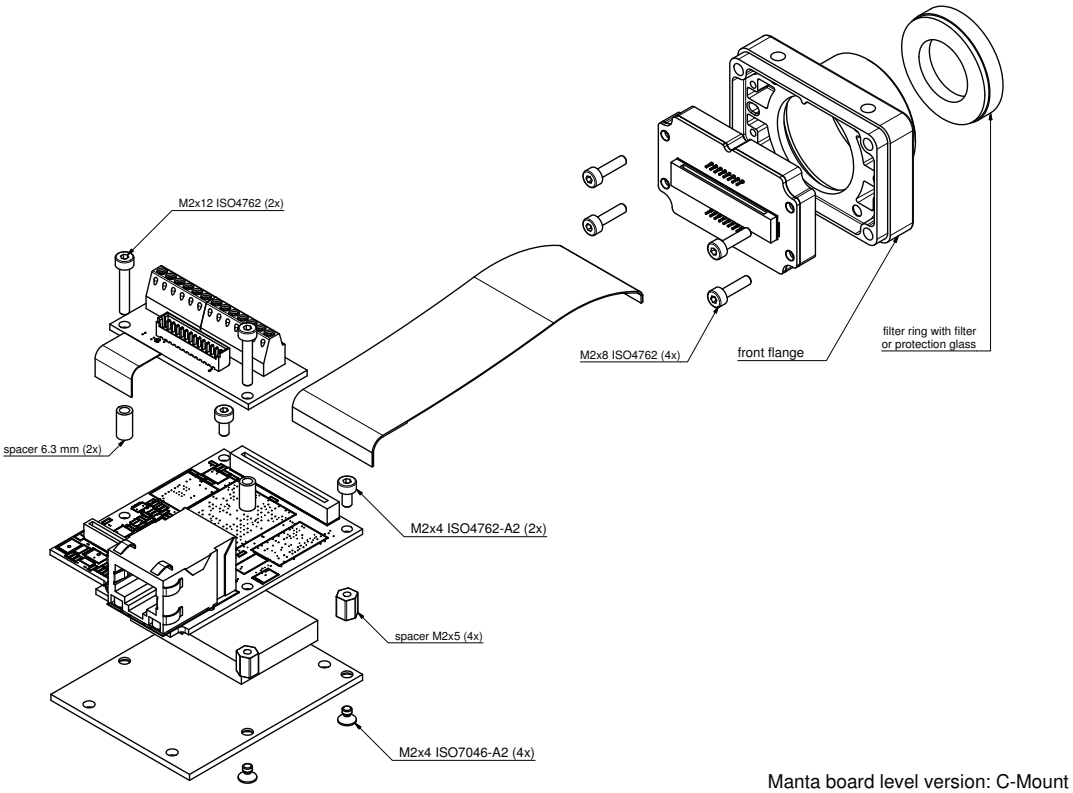

Figure 27: Manta board level: C-Mount

The dimensional adjustment cannot be done by the customer. All adjustments have to be done by the AVT factory.

If you need any adjustments, please contact Customer Care: For phone numbers and e-mail: See Chapter *Contacting Allied Vision Technologies* on page 5.

Manta board level: CS-Mount

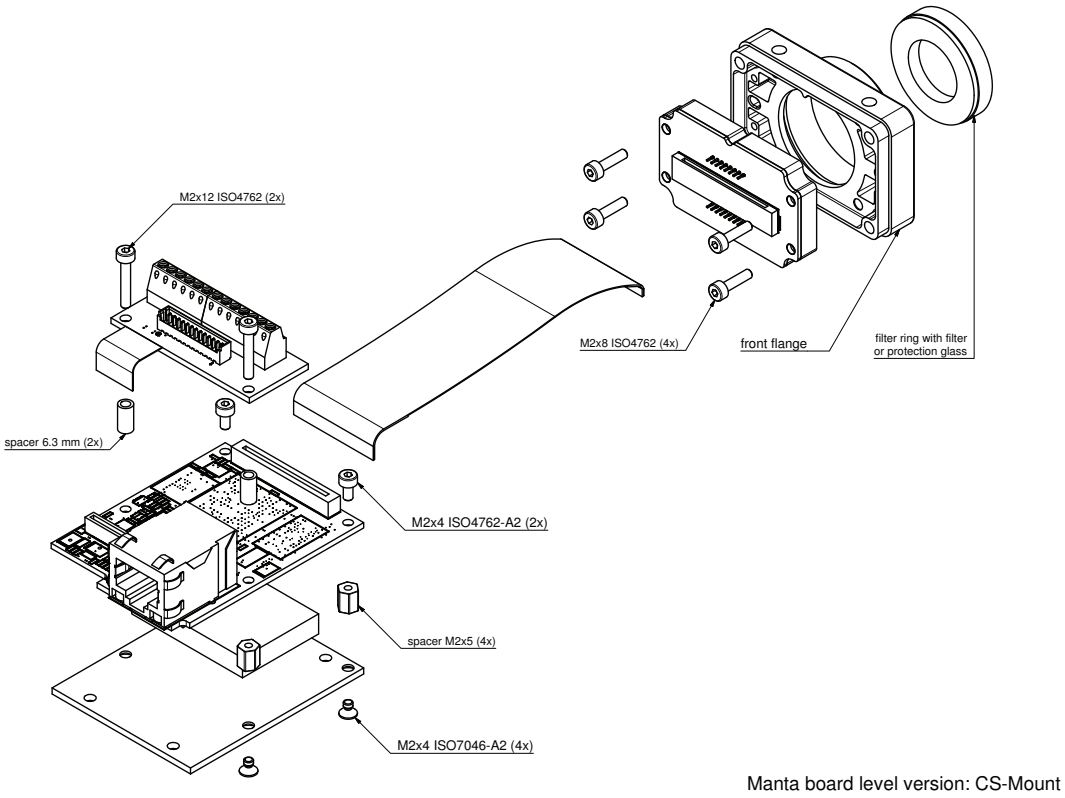

Figure 28: Manta board level: CS-Mount

The dimensional adjustment cannot be done by the customer. All adjustments have to be done by the AVT factory.

If you need any adjustments, please contact Customer Care: For phone numbers and e-mail: See Chapter *Contacting Allied Vision Technologies* on page 5.

Manta board level: M12-Mount

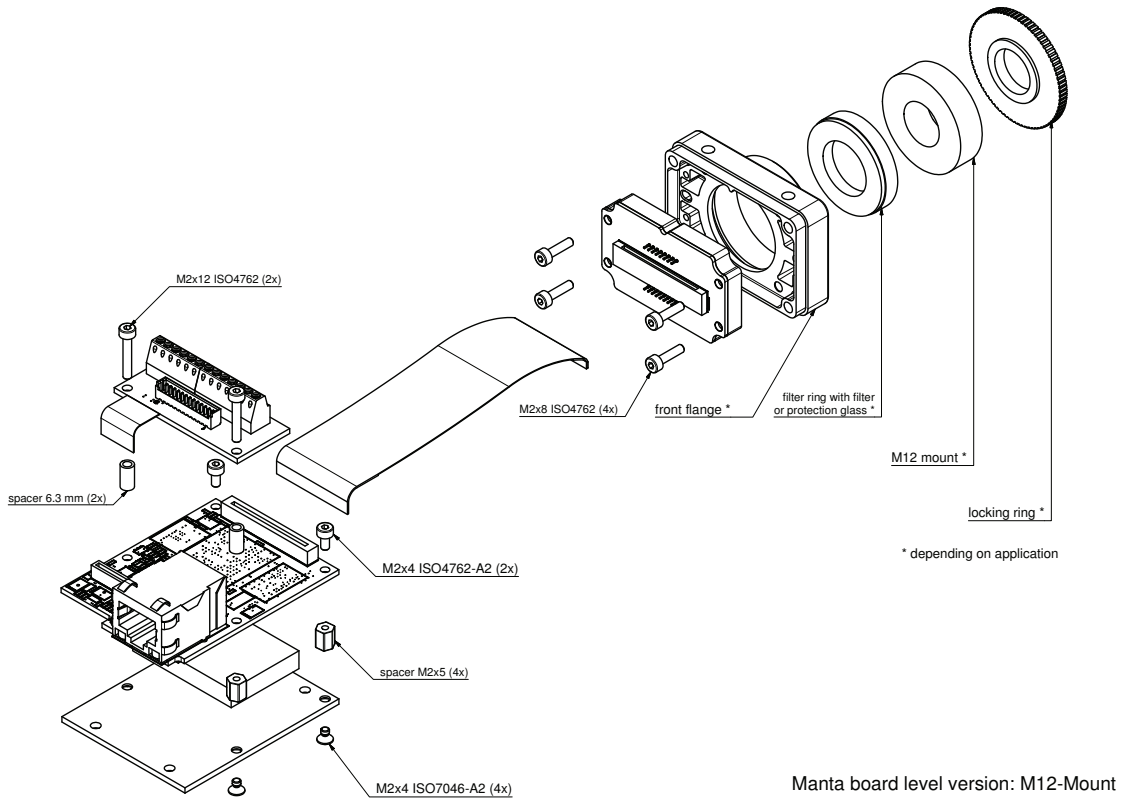

Figure 29: Manta board level: M12-Mount

The dimensional adjustment cannot be done by the customer (depending on application). All adjustments have to be done by the AVT factory.

If you need any adjustments, please contact Customer Care: For phone numbers and e-mail: See Chapter *Contacting Allied Vision Technologies* on page 5.

Camera interfaces

This chapter gives you information on Gigabit Ethernet port, inputs and outputs and trigger features.

Note

For a detailed description of the **camera interfaces (GigE, I/O connector, status LEDs), and operating instructions** see the **Manta Hardware Installation Guide,** Chapter ***Camera interfaces***.

Read all ***Notes*** and ***Cautions*** in the **Manta Hardware Installation Guide**, before using any interfaces.

www

For accessories like cables see:

http://www.alliedvisiontec.com/emea/products/accessories/gige-accessories.html

Gigabit Ethernet port

The Gigabit Ethernet port conforms to the IEEE 802.3 1000BASE-T standard for Gigabit Ethernet over copper. We recommend using Category 5e or Category 6 compatible cabling and connectors for best performance.

Note

- Cable lengths up to 100 m are supported.
- The 8-pin RJ-45 jack has the pin assignment according to the Ethernet standard (IEEE 802.3 1000BASE-T).
- For cameras that are **PoE** capable, the GigE connector can be used to provide power to the camera.
- If you supply power via **PoE**, the power must comply with IEEE **802.3at**.
- If both interfaces are used for power (I/O and GigE connector via **PoE**), the camera will only use the power from the I/O connector.

PoE and non PoE

- How can I distinguish between PoE capable cameras and cameras that are not PoE capable?
  - **PoE** capable cameras have the letters **PoE** written on the camera's label on the back side and the bottom side of the camera.
  - **PoE** capable cameras have the **GigE jack upside down**.

Exception

Manta G-145-30fps and Manta G-201-30fps (non PoE)

- ... have same I/O pin assignment (input circuits and voltage range), power LED and upside down PoE plug as PoE models

Accessories

- Cables with screw-lock connectors are available from AVT: http://www.alliedvisiontec.com/emea/products/accessories/gige-accessories.html
- Ask your local dealer for more details.

Camera I/O connector pin assignment

Note

Manta G-145-30fps / 201-30fps non-PoE behave like PoE cameras.

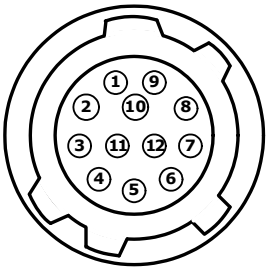

Pin	Signal	Direction	Level	Description
1	External GND		GND for RS232 and ext. power	External Ground for RS232 and external power
2	External Power		+8 ... +30 V DC	Power supply
3	---	---	---	---
4	Camera In 1	In	U_{in}(high) = 2.5 V...6.0 V U_{in}(low) = 0 V...0.8 V **PoE:** U_{in}(high) = 3 V...24 V up to 36 V with external resistor of 3.3 kΩ in series U_{in}(low) = 0 V...1 V	Camera Input 1 (GP In 1)
5	---	---	---	---
6	Camera Out 1	Out	Open emitter, max. 20 mA	Camera Output 1 (GP Out 1)
7	Camera In GND	In	Common GND for inputs	Camera Common Input Ground (In GND)
8	RxD RS232	In	RS232	Terminal Receive Data
9	TxD RS232	Out	RS232	Terminal Transmit Data
10	Camera Out Power	In	Common VCC for outputs max. 30 V DC	External Power for digital outputs (OutVCC)
11	Camera In 2	In	U_{in}(high) = 2.5 V...6.0 V U_{in}(low) = 0 V...0.8 V **PoE:** U_{in}(high) = 3 V...24 V U_{in}(low) = 0 V...1 V	Camera Input 2 (GP In 2)
12	Camera Out 2	Out	Open emitter, max. 20 mA	Camera Output 2 (GP Out 2)

Figure 30: Camera I/O connector pin assignment

Note

GP = **G**eneral **P**urpose

For a detailed description of the **I/O connector and its operating instructions** see the **Manta Hardware Installation Guide, Chapter *MANTA input description***.

Read all ***Notes*** and ***Cautions*** in the **Manta Hardware Installation Guide**, before using the I/O connector.

Control signals

The inputs and outputs of the camera can be configured by software. The different modes are described below.

Inputs

Note

For a general description of the **inputs** and **warnings** see the **Hardware Installation Guide,** Chapter ***MANTA input description*.**

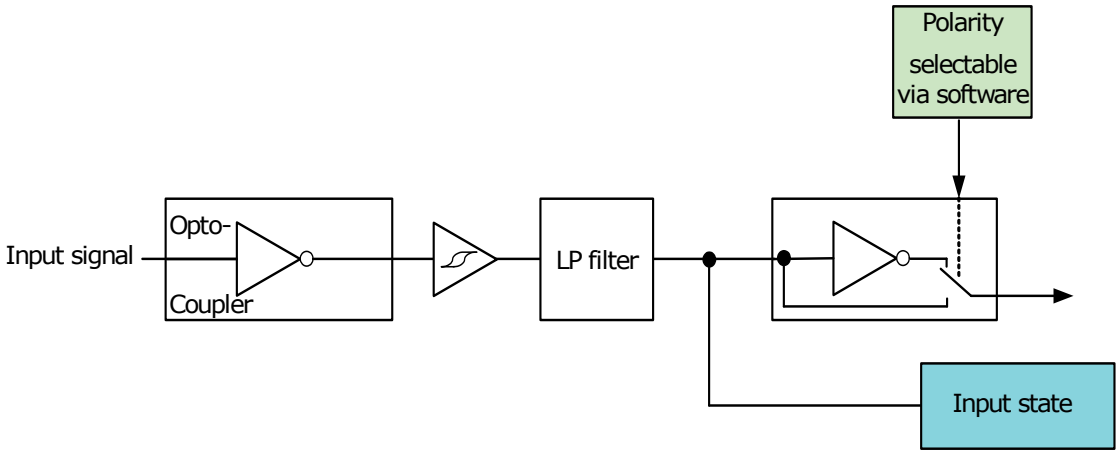

Figure 31: Input block diagram

Input/output pin control

All input and output signals running over the camera I/O connector are controlled by the I/O strobe commands. See **AVT Manta Camera Controls**.

Outputs

Note

For a general description of the **outputs** and **warnings** see the **Manta Hardware Installation Guide**, Chapter ***MANTA output description*.**

Output features are configured by software. Any signal can be placed on any output.

The main features of output signals are described below:

Signal	Description
GPO	Configured to be a general purpose output, control of which is assigned to SyncOutGpoLevels
AcquisitionTriggerReady	Active once the camera has been recognized by the host PC and is ready to start acquisition.
FrameTriggerReady	Active when the camera is in a state that will accept the next frame trigger.
FrameTrigger	Active when an image has been initiated to start. This is a logic trigger internal to the camera, which is initiated by an external trigger or software trigger event.
Exposing	Exposing – Active for the duration of sensor exposure.
FrameReadout	Active at during frame readout, i.e. the transferring of image data from the CCD to camera memory.
Imaging	Imaging is high when the camera image sensor is either exposing and/or reading out data.
Acquiring	Active during an acquisition stream.
SyncIn1	Active when there is an external trigger at SyncIn1
SyncIn2	Active when there is an external trigger at SyncIn2
Strobe1	The output signal is controlled according to Strobe1 settings.

Table 15: Output signals

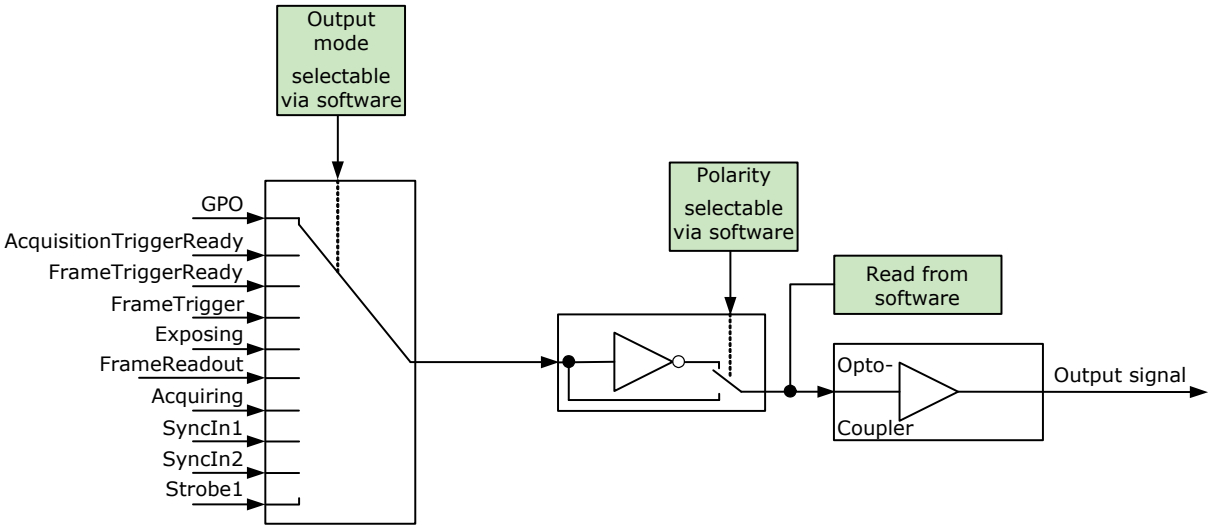

Figure 32: Output block diagram

Trigger timing diagram

The following diagram explains the trigger concept in general.

Note For trigger description on camera control basis see **AVT GigE camera control**.

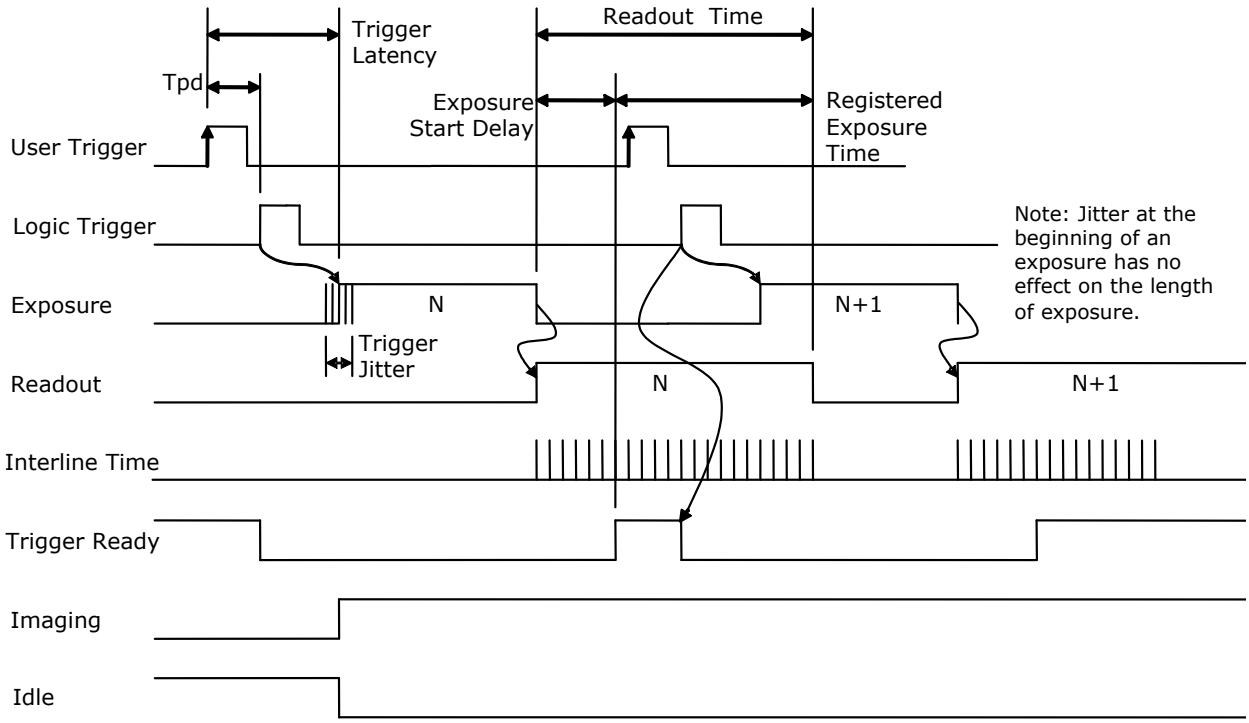

Figure 33: Trigger timing diagram

Notes on Triggering

Trigger definitions

Term	Definition
User Trigger	Trigger signal applied by the user (hardware trigger, software trigger)
Logic Trigger	Trigger signal seen by the camera internal logic (not visible to the user)

Table 16: Trigger definitions

Term	Definition
Tpd	Propagation delay between the User Trigger and the Logic Trigger
Exposure	... is high when the camera image sensor is integrating light.
Readout	... is high when the camera image sensor is reading out data.
Trigger Latency	Time delay between the User Trigger and the start of Exposure
Trigger Jitter	Error in the Trigger Latency Time
Trigger Ready	... indicates to the user that the camera will accept the next trigger.
Registered Exposure Time	... is the Exposure Time value currently stored in the camera memory.
Exposure Start Delay	... is the Registered Exposure Time subtracted from the Readout time and indicates when the next Exposure cycle can begin such that the Exposure will end after the current Readout.
Interline Time	... is the time between sensor row readout cycles.
Imaging	... is high when the camera image sensor is either exposing and/or reading out data.
Idle	... is high if the camera image sensor is not exposing and/or reading out data.

Table 16: Trigger definitions

Trigger rules

Note

The **User Trigger pulse width** should be at least three times the width of the Trigger Latency as indicated in Chapter *Specifications* on page 16ff.

- The **end of Exposure** will always trigger the next Readout.
- The **end of Exposure** must always end after the current Readout.
- The **start of Exposure** must always correspond with the Interline Time if Readout is true.
- **Exposure Start Delay** equals the Readout time minus the Registered Exposure Time.

Triggering during the Idle State

For applications requiring the shortest possible Trigger Latency and the smallest possible Trigger Jitter the User Trigger signal should be applied when Imaging is false and Idle is true.

Triggering during the Readout State

For applications requiring the fastest triggering cycle time whereby the camera image sensor is exposing and reading out simultaneously, then the User Trigger signal should be applied as soon as a valid Trigger Ready is detected.

In this case, Trigger Latency and Trigger Jitter can be up to 1 line time since Exposure must always begin on an Interline boundary.

Note

For a more detailed description of the trigger concept for **advanced users** and special scenarios see **AVT Manta Camera Controls**, chapter *Trigger concept for advanced users*.

Description of the data path

Block diagrams of the cameras

The following diagrams illustrate the data flow and the bit resolution of image data after being read from the CCD sensor chip in the camera. The individual blocks are described in more detail in the following manual: **AVT GigE Camera Controls**. For sensor data see Chapter *Specifications* on page 16.

Black and white cameras

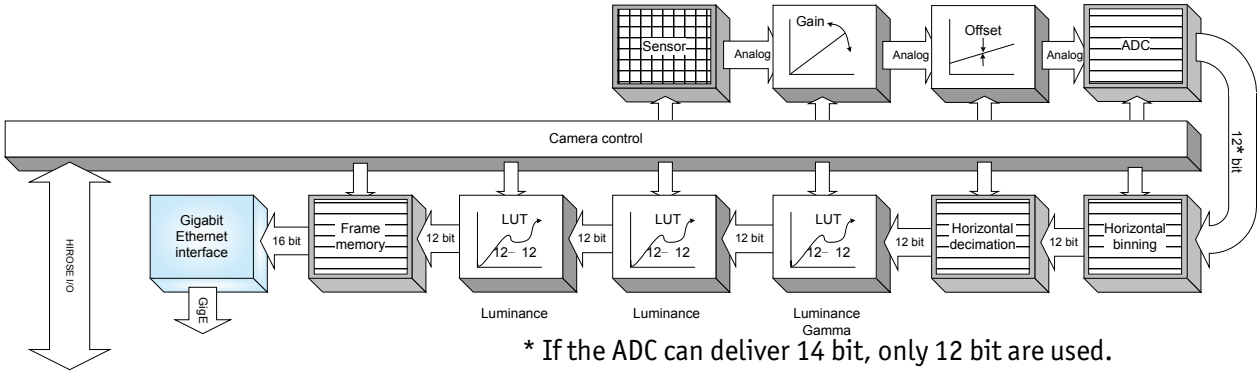

* If the ADC can deliver 14 bit, only 12 bit are used.

Figure 34: Block diagram b/w camera

Color cameras

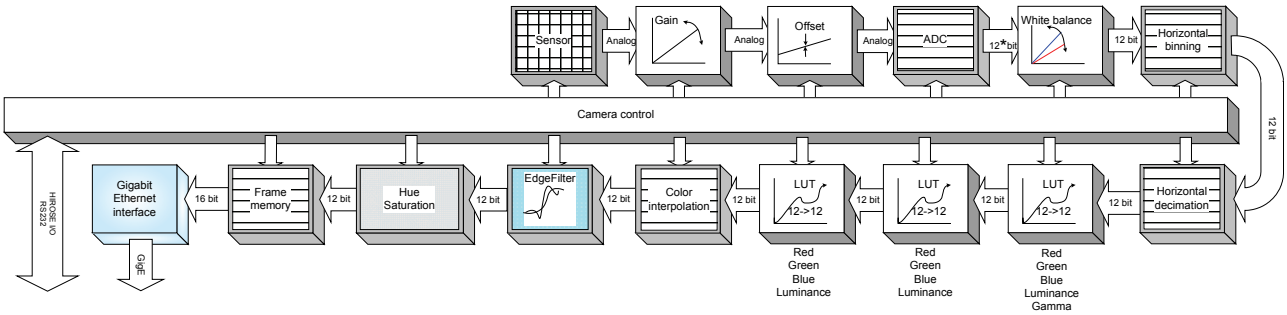

* If the ADC can deliver 14 bit, only 12 bit are used.

Figure 35: Block diagram color camera

Available Manta camera controls

Some camera controls are not always available (Example: Color interpolation is implemented in Manta cameras, but is not available in RAW mode).

Note

For a detailed description of the camera controls see the manual: **AVT Manta Camera Controls**

http://www.alliedvisiontec.com/emea/support/downloads/product-literature.html

The following camera controls are available:

Hierarchy level 1	Hierarchy level 2	Hierarchy level 3	Hierarchy level 4
Info			
	CameraName		
	DeviceFirmwareVersion		
	DeviceModelName		
	DevicePartNumber		
	DeviceScanType		
	DeviceSerialNumber		
	DeviceVendorName		
	Firmware		
		FirmwareVerBuild	
		FirmwareVerMajor	
		FirmwareVerMinor	
	Part		
		PartClass	
		PartNumber	
		PartRevision	
		PartVersion	
		SerialNumber	
	Sensor		
		SensorBits	
		SensorHeight	
		SensorType	
		SensorWidth	
	UniqueId		

Table 17: Available Manta camera controls

Hierarchy level 1	Hierarchy level 2	Hierarchy level 3	Hierarchy level 4
ImageMode			
	BinningX		
	BinningY		
	DecimationHorizontal		
	DecimationVertical		
Acquisition			
	Trigger		
		AcqEnd	
			AcqEndTriggerEvent
			AcqEndTriggerMode
		AcqRec	
			AcqRecTriggerEvent
			AcqRecTriggerMode
		AcqStart	
			AcqStartTriggerEvent
			AcqStartTriggerMode
		FrameRate	
		FrameStart	
			FrameStartTriggerDelay
			FrameStartTriggerEvent
			FrameStartTriggerMode
			FrameStartTriggerOverlap
			FrameStartTriggerSoftware
	AcquisitionAbort		
	AcquisitionFrameCount		
	AcquisitionMode		
	AcquisitionStart		
	AcquisitionStop		
	RecorderPreEventCount		

Table 17: Available Manta camera controls

Hierarchy level 1	Hierarchy level 2	Hierarchy level 3	Hierarchy level 4
ImageFormat			
	ROI		
		Height	
		RegionX	
		RegionY	
		Width	
	PixelFormat		
	TotalBytesPerFrame		

Table 17: Available Manta camera controls

Hierarchy level 1	Hierarchy level 2	Hierarchy level 3	Hierarchy level 4
Controls			
	ColorTransformationControl		
		ColorTransformationMode	
		ColorTransformationValueBB	
		ColorTransformationValueBG	
		ColorTransformationValueBR	
		ColorTransformationValueGB	
		ColorTransformationValueGG	
		ColorTransformationValueGR	
		ColorTransformationValueRB	
		ColorTransformationValueRG	
		ColorTransformationValueRR	
	DSP		
		DSPSubregionBottom	
		DSPSubregionLeft	
		DSPSubregionRight	
		DSPSubregionTop	
	EdgeFilter		
	Gamma		
	Exposure		
		Auto	
			ExposureAutoAdjustTol
			ExposureAutoAlg
			ExposureAutoMax
			ExposureAutoMin
			ExposureAutoOutliers
			ExposureAutorRate
			ExposureAutoTarget
		ExposureMode	
		ExposureValue	
	Gain		
		Auto	
			GainAutoAdjustTol
			GainAutoMax
			GainAutoMin
			GainAutoOutliers
			GainAutoRate
			GainAutoTarget
		GainMode	
		GainValue	
	Hue		

Table 17: Available Manta camera controls

Hierarchy level 1	Hierarchy level 2	Hierarchy level 3	Hierarchy level 4
Controls	Iris		
		IrisAutoTarget	
		IrisMode	
		IrisVideoLevel	
		IrisVideoLevelMax	
		IrisVideoLevelMin	
	LUTControl		
		LUTSelector	
		LUTMode	
		LUTEnable	
		LUTIndex	
		LUTValue	
		LUTLoad	
		LUTSave	
		LUTInfo	
			LUTAddress
			LUTSizeBytes
			LUTBitDepthIn
			LUTBitDepthOut
	Offset		
		OffsetValue	
	Saturation		
	WhiteBalance		
		WhitebalMode	
		Auto	
			WhitebalAutoAdjustTol
			WhitebalAutoAlg
			WhitebalAutoRate
		WhitebalValueBlue	
		WhitebalValueRed	

Table 17: Available Manta camera controls

Hierarchy level 1	Hierarchy level 2	Hierarchy level 3	Hierarchy level 4
EventControls			
	EventID		
		EventAcquisitionStart	
		EventAcquisitionEnd	
		EventFrameTrigger	
		EventExposureEnd	
		EventAcquisitionRecordTrigger	
		EventSyncIn1Rise	
		EventSyncIn1Fall	
		EventSyncIn2Rise	
		EventSyncIn2Fall	
		EventSyncIn3Rise	
		EventSyncIn3Fall	
		EventSyncIn4Rise	
		EventSyncIn4Fall	
		EventOverflow	
		EventError	
	EventNotification		
	EventSelector		
	EventsEnable1		
ConfigFile			
	ConfigFileIndex		
	ConfigFileLoad		
	ConfigFilePowerUp		
	ConfigFileSave		

Table 17: Available Manta camera controls

Hierarchy level 1	Hierarchy level 2	Hierarchy level 3	Hierarchy level 4
GigE			
	BandwidthCtrlMode		
	ChunkModeActive		
	NonImagePayloadSize		
	PayloadSize		
	StreamFrameRateConstrain		
	Ethernet		
		DeviceEthAddress	
		HostEthAddress	
	IP		
		DeviceIPAddress	
		HostIPAddress	
	GvcpRetries		
	Gvsp		
		GvspLookbackWindow	
		GvspResendPercent	
		GvspRetries	
		GvspSocketBuffersCount	
		GvspTimeout	
	HeartbeatInterval		
	HeartbeatTimeout		
	Multicast		
		MulticastEnable	
		MulticastIPAddress	
	PacketSize		
	StreamBytesPerSecond		
	StreamHold		
		StreamHoldCapacity	
		StreamHoldEnable	
	Timestamp		
		TimeStampFrequency	
		TimeStampReset	
		TimeStampValueHi	
		TimeStampValueLatch	
		TimeStampValueLo	

Table 17: Available Manta camera controls

Hierarchy level 1	Hierarchy level 2	Hierarchy level 3	Hierarchy level 4
IO			
	Strobe		
		1	
			Strobe1ControlledDuration
			Strobe1Delay
			Strobe1Duration
			Strobe1Mode
	SyncIn1		
		SyncInGlitchFilter	
	SyncIn2		
		SyncInGlitchFilter	
	SyncInLevels		
	SyncOut1		
		SyncOut1Invert	
		SyncOut1Mode	
	SyncOut2		
		SyncOut2Invert	
		SyncOut2Mode	
	SyncOutGpoLevels		
Stats			
	StatDriverType		
	StatFilterVersion		
	StatFrameRate		
	StatFramesCompleted		
	StatFramesDropped		
	StatPacketsErroneous		
	StatPacketsMissed		
	StatPacketsReceived		
	StatPacketsRequested		
	StatPacketsResent		

Table 17: Available Manta camera controls

Frame memory

An image is normally captured and transported in consecutive steps. The image is taken, read out from the sensor, digitized and sent over the Gigabit Ethernet network.

Manta cameras are equipped with 32 MByte of RAM. The table below shows how many frames can be stored by each model.

Note

The number of frames (StreamHoldCapacity) depends on resolution and pixel format. Listed number of frames is typical for full resolution and Mono8/Bayer8.

The memory operates according to the FIFO (first in, first out) principle. This makes addressing for individual images unnecessary.

Model	Memory size		Pixel format/ resolution
Manta G-032B/C	32 MB memory:	49 frames	Mono8/ full resolution
Manta G-033B/C	32 MB memory:	88 frames	
Manta G-046B/C	32 MB memory:	35 frames	
Manta G-125B/C	32 MB memory:	12 frames	
Manta G-145B/C	32 MB memory:	10 frames	
Manta G-145B/C-30fps	32 MB memory:	10 frames	
Manta G-146B/C	32 MB memory:	10 frames	
Manta G-201B/C	32 MB memory:	8 frames	
Manta G-201B/C-30fps	32 MB memory:	8 frames	
Manta G-504B/C	32 MB memory:	6 frames	

Table 18: Image memory size (typical; see note above)

Color interpolation (BAYER demosaicing)

The color sensors capture the color information via so-called primary color (R-G-B) filters placed over the individual pixels in a **BAYER mosaic** layout. An effective BAYER → RGB color interpolation already takes place in all Manta color version cameras.

In color interpolation a red, green or blue value is determined for each pixel. An AVT proprietary BAYER demosaicing algorithm is used for this interpolation (2x2), optimized for both sharpness of contours as well as reduction of false edge coloring.

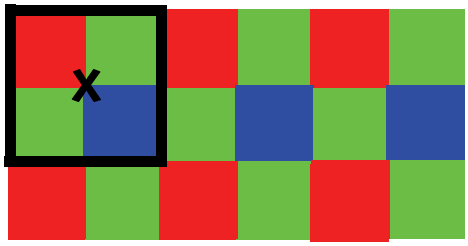

Figure 36: BAYER demosaicing (example of 2x2 matrix)

Color processing can be bypassed by using so-called RAW image transfer.

RAW mode is primarily used to

- save bandwidths on the Gigabit Ethernet network
- achieve higher frame rates
- use different BAYER demosaicing algorithms on the PC
  - for Manta the first pixel of the sensor is RED

Note

If the PC does not perform BAYER to RGB post-processing, the b/w image will be superimposed with a checkerboard pattern.

In color interpolation a red, green or blue value is determined for each pixel (P1= first pixel; P2= second pixel; etc). Only two lines are needed for this interpolation:

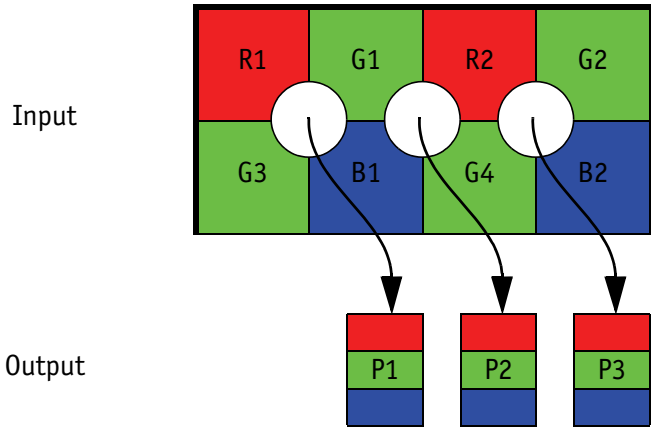

Figure 37: BAYER demosaicing (interpolation)

$$P1_{red} = R1 \qquad P2_{red} = R2 \qquad P3_{red} = R2$$

$$P1_{green} = \frac{G1 + G3}{2} \qquad P2_{green} = \frac{G1 + G4}{2} \qquad P3_{green} = \frac{G2 + G4}{2}$$

$$P1_{blue} = B1 \qquad P2_{blue} = B1 \qquad P3_{blue} = B2$$

Formula 1: BAYER demosaicing

Note

- Please note that on the color camera, a wrongly colored border of one or two pixel wide forms on the left and right image borders. This is also a consequence of BAYER demosaicing as the image width displayed on the color camera is **not** scaled down.
- Using ROI, x and y resolutions must be even-numbered.

Resolution and ROI frame rates

Manta G-032B/C: ROI frame rates

$$\text{max. frame rate of CCD} = \frac{1}{24.34\mu s \times \text{ROI height} + 3.01\mu s \times (492 - \text{ROI height}) + 495.50\mu s}$$

Formula 2: **Manta G-032**: theoretical max. frame rate of CCD

Max. frame rate at full resolution according formula: 80.17 fps

ROI height	CCD*
492	80.17
480	81.87
320	113.61
240	140.93
120	220.46
60	307.10
30	382.22
10	456.68
2	495.28

Table 19: Frame rates (fps) of **Manta G-032** as function of ROI height (pixel) [**width=656**]

* CCD = theoretical max. frame rate (in fps) of CCD according to given formula

Manta G-033B/C: ROI frame rates

$$\text{max. frame rate of CCD} = \frac{1}{22.49\mu s \times \text{ROI height} + 1.51\mu s \times (492 - \text{ROI height}) + 198.4\mu s}$$

Formula 3: **Manta G-033**: theoretical max. frame rate of CCD

Max. frame rate at full resolution according formula: 88.78 fps

ROI height	CCD*
492	88.78
480	90.81
320	130.63
240	167.32
120	289.11
60	454.52
30	636.65
10	868.72
2	1017.00

Table 20: Frame rates (fps) of **Manta G-033** as function of ROI height (pixel) [**width=656**]

* CCD = theoretical max. frame rate (in fps) of CCD according to given formula

Manta G-046B/C: ROI frame rates

$$\text{max. frame rate of CCD} = \frac{1}{25.14\mu s \times \text{ROI height} + 1.75\mu s \times (580 - \text{ROI height}) + 224.03\mu s}$$

Formula 4: **Manta G-046**: theoretical max. frame rate of CCD

Max. frame rate at full resolution according formula: 67.54 fps

ROI height	CCD*
580	67.54
492	88.78
480	90.81
320	130.63
240	167.32
120	289.11
60	454.52
30	636.65
10	868.72
2	1017.00

Table 21: Frame rates (fps) of **Manta G-046** as function of ROI height (pixel) [**width=780**]

* CCD = theoretical max. frame rate (in fps) of CCD according to given formula

Manta G-125B/C: ROI frame rates

$$\text{max. frame rate of CCD} = \frac{1}{33.21\mu s \times \text{ROI height} + 5.04\mu s \times (964 - \text{ROI height}) + 226.52\mu s}$$

Formula 5: **Manta G-125**: theoretical max. frame rate of CCD

Max. frame rate at full resolution according formula: 31.02 fps

ROI height	CCD*
964	31.02
768	37.43
600	45.48
480	53.74
320	70.92
240	84.42
120	118.13
60	147.60
30	168.63
10	186.33
2	194.50

Table 22: Frame rates (fps) of **Manta G-125** as function of ROI height (pixel) [**width=1292**]

* CCD = theoretical max. frame rate (in fps) of CCD according to given formula

Manta G-145B/C: ROI frame rates

$$\text{max. frame rate of CCD} = \frac{1}{57.79\mu s \times \text{ROI height} + 5.86\mu s \times (1038 - \text{ROI height}) + 345.14\mu s}$$

Formula 6: **Manta G-145**: theoretical max. frame rate of CCD

Max. frame rate at full resolution according formula: 16.57 fps

ROI height	CCD*
1038	16.57
960	17.76
768	21.59
640	25.21
480	31.89
320	43.39
240	52.93
120	78.99
60	104.78
30	125.22
10	143.94
2	153.10

Table 23: Frame rates (fps) of **Manta G-145** as function of ROI height (pixel) [**width=1388**]

* CCD = theoretical max. frame rate (in fps) of CCD according to given formula

Manta G-145B/C-30fps: ROI frame rates

$$\text{max. frame rate of CCD} = \frac{1}{30.68\mu s \times \text{ROI height} + 4.71\mu s \times (1038 - \text{ROI height}) + 230.61\mu s}$$

Formula 7: **Manta G-145-30fps**: theoretical max. frame rate of CCD

Max. frame rate at full resolution according formula: 31.17 fps

ROI height	CCD*
1038	31.17
960	33.27
768	39.89
640	45.99
480	56.86
320	74.46
240	88.08
120	121.41
60	149.75
30	169.52
10	185.89
2	193.36

Table 24: Frame rates (fps) of **Manta G-145-30fps** as function of ROI height (pixel) [**width=1388**]

* CCD = theoretical max. frame rate (in fps) of CCD according to given formula

Manta G-146B/C: ROI frame rates

$$\text{max. frame rate of CCD} = \frac{1}{53.54\mu s \times \text{ROI height} + 10.46\mu s \times (1038 - \text{ROI height}) + 352\mu s}$$

Formula 8: **Manta G-146**: theoretical max. frame rate of CCD

Max. frame rate at full resolution according formula: 17.88 fps

ROI height	CCD*
1038	17.88
960	19.02
768	22.57
640	25.78
480	31.36
320	40.00
240	46.40
120	61.05
60	72.49
30	79.98
10	85.90
2	88.53

Table 25: Frame rates (fps) of **Manta G-146** as function of ROI height (pixel) [**width=1388**]

* CCD = theoretical max. frame rate (in fps) of CCD according to given formula

Manta G-201B/C: ROI frame rates

$$\text{max. frame rate of CCD} = \frac{1}{54.81\mu s \times \text{ROI height} + 7.14\mu s \times (1234 - \text{ROI height}) + 340.03\mu s}$$

Formula 9: **Manta G-201**: theoretical max. frame rate of CCD

Max. frame rate at full resolution according formula: 14.71 fps

ROI height	CCD*
1234	14.71
1200	15.07
960	18.21
768	21.84
640	25.21
480	31.21
320	40.97
240	48.56
120	67.24
60	83.25
30	94.51
10	103.86
2	108.15

Table 26: Frame rates (fps) of **Manta G-201** as function of ROI height (pixel) [**width=1624**]

* CCD = theoretical max. frame rate (in fps) of CCD according to given formula

Manta G-201B/C-30fps: ROI frame rates

$$\text{max. frame rate of CCD} = \frac{1}{26.87\mu s \times \text{ROI height} + 2.84\mu s \times (1234 - \text{ROI height}) + 178.72\mu s}$$

Formula 10: **Manta G-201-30fps**: theoretical max. frame rate of CCD

Max. frame rate at full resolution according formula: 30.0 fps

Max. frame rate at 1600 x 1200 (measured): 31.02 fps

ROI height	CCD*
1234	30.00
1200	30.75
960	37.38
768	45.17
640	52.45
480	65.71
320	87.92
240	105.81
120	152.28
60	195.11
30	227.05
10	254.86
2	268.00

Table 27: Frame rates (fps) of **Manta G-201** as function of ROI height (pixel) [**width=1624**]

* CCD = theoretical max. frame rate (in fps) of CCD according to given formula

Manta G-504B/C: ROI frame rates

$$\text{max. frame rate of CCD} = \frac{1}{52.55\mu s \times \text{ROI height} + 10.27\mu s \times (2056 - \text{ROI height}) + 295.62\mu s}$$

Formula 11: **Manta G-504**: theoretical max. frame rate of CCD

Max. frame rate at full resolution according formula: 9.23 fps

ROI height	CCD*
2056	9.23
1600	11.22
1200	13.86
960	16.12
768	18.55
640	20.63
480	23.97
320	28.62
240	31.68
120	37.75
60	41.75
30	44.09
10	45.80
2	46.52

Table 28: Frame rates (fps) of **Manta G-504** as function of ROI height (pixel) [**width=2452**]

* CCD = theoretical max. frame rate (in fps) of CCD according to given formula

Appendix

Sensor position accuracy of AVT Manta cameras

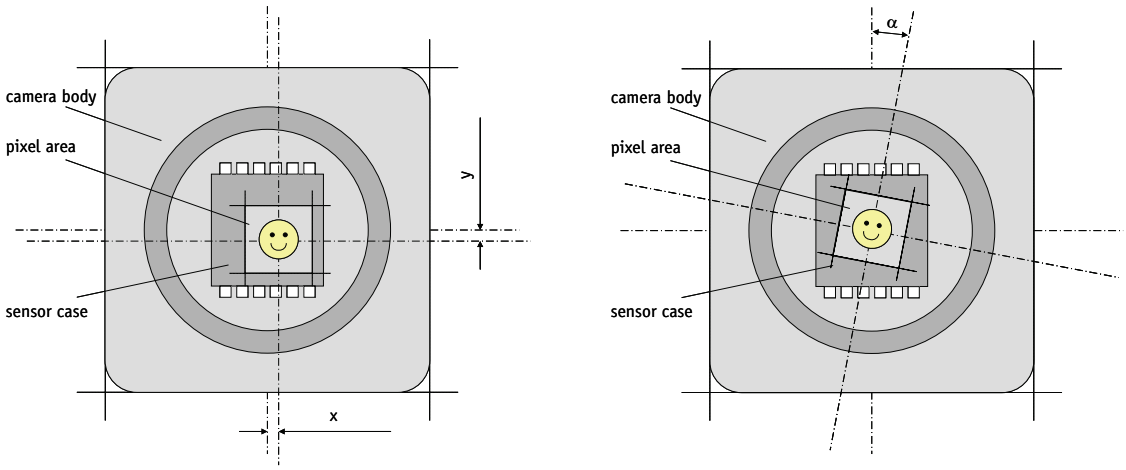

AVT Manta series

Method of Positioning:	Optical alignment of photo sensitive sensor area into camera front module. (lens mount front flange)		
Reference points:	Sensor: Center of pixel area (photo sensitive cells). Camera: Center of camera front flange (outer case edges).		
Accuracy:	x/y:	+/- 150 µm	(Sensor shift)
	z:	+0 / -150 µm	(Optical back focal length)
	α:	+/- 0.5°	(Sensor rotation)

Note: x/y - tolerances between C-Mount hole and pixel area may be higher.

Figure 38: AVT sensor position accuracy

Index

I

L

M

O

P

R

S

T

U