DV3.4x3.8SA-SA1

Applicable camera (model): 1 | 2/3 | **1/2** | **1/3** | **1/4**

3.4 x

Applicable to **1/2**

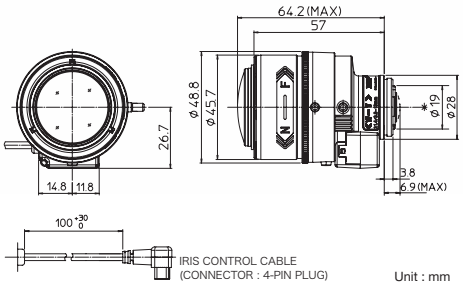

Full HD 3MP

Vari-Focal: VARI | Wide Angle: WIDE | Telephoto Long Focal: TELE | DC Auto Iris: DC | C Mount: C-mt | Metal Mount: METAL | ND Filter: ND | Long Cable: 230 | Aspherical Lens: AT | Large Aperture Ratio: F1.4 | RoHS Compliant: RoHS

Focal Length (mm)			3.8 - 13 (3.4x)
Iris Range			F1.4 - T360(Equivalent to F360)
Operation	Zoom		Manual
	Focus		Manual
	Iris		Auto (DC type)*1
Angle of View (H × V)	1/2"	WIDE	97° 34' × 71° 47'
		TELE	28° 23' × 21° 18'
	1/3"	WIDE	71° 47' × 53° 15'
		TELE	21° 18' × 15° 59'
	1/4"	WIDE	53° 15' × 39° 41'
		TELE	15° 59' × 11° 59'
Angle of View (H × V) Aspect Ratio 16:9	1/2"	WIDE	107° 12' × 58° 10'
		TELE	30° 55' × 17° 25'
	1/3"	WIDE	78° 34' × 43° 18'
		TELE	23° 12' × 13° 04'
	1/4"	WIDE	58° 10' × 32° 20'
		TELE	17° 25' × 9° 48'
Focus Range (From the Lens Front) (m)			∞ - 0.3
Mass (g)			80

DV10x8SA-SA1

Applicable camera (model): 1 | 2/3 | **1/2** | **1/3** | **1/4**

10 x

Applicable to **1/2**

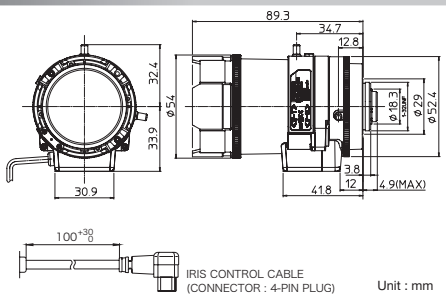

Full HD 3MP

Vari-Focal: VARI | Telephoto Long Focal: TELE | DC Auto Iris: DC | C Mount: C-mt | Metal Mount: METAL | ND Filter: ND | Long Cable: 230 | Aspherical Lens: AT | Large Aperture Ratio: F1.4 | RoHS Compliant: RoHS

Focal Length (mm)			8 - 80 (10x)
Iris Range			F1.4 - T360(Equivalent to F360)
Operation	Zoom		Manual
	Focus		Manual
	Iris		Auto (DC type)*1
Angle of View (H × V)	1/2"	WIDE	44° 21' × 33° 25'
		TELE	4° 38' × 3° 30'
	1/3"	WIDE	33° 25' × 25° 06'
		TELE	3° 30' × 2° 38'
	1/4"	WIDE	25° 06' × 18° 51'
		TELE	2° 38' × 1° 59'
Angle of View (H × V) Aspect Ratio 16:9	1/2"	WIDE	48° 12' × 27° 21'
		TELE	2° 52' × 5° 02'
	1/3"	WIDE	36° 22' × 20° 32'
		TELE	3° 48' × 2° 09'
	1/4"	WIDE	27° 21' × 15° 24'
		TELE	2° 52' × 1° 37'
Focus Range (From the Lens Front) (m)			∞ - 1.5
Mass (g)			160

SD

YV2.8x2.8LA-SA2

Applicable camera (model): 1 | 2/3 | 1/2 | **1/3** | **1/4**

2.8 x

Applicable to **1/3**

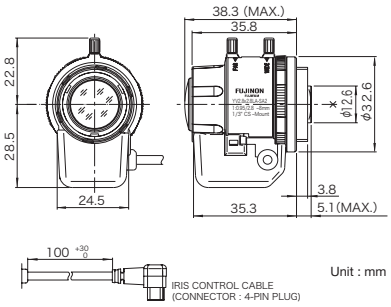

Vari-Focal: VARI | Wide Angle: WIDE | DC Auto Iris: DC | CS Mount: CS-mt | Metal Mount: METAL | ND Filter: ND | Long Cable: 230 | Aspherical Lens: AT | Large Aperture Ratio: F0.95 | RoHS Compliant: RoHS

Focal Length (mm)			2.8 - 8(2.8x)
Iris Range			F0.95 - T360(Equivalent to F360)
Operation	Zoom		Manual
	Focus		Manual
	Iris		Auto (DC type)*1
Angle of View (H × V)	1/2"	WIDE	–
		TELE	–
	1/3"	WIDE	99° 52' × 73° 17'
		TELE	35° 14' × 26° 24'
	1/4"	WIDE	73° 17' × 54° 19'
		TELE	26° 24' × 19° 47'
Focus Range (From the Lens Front) (m)			∞ - 0.3
Mass (g)			45

YV10x5B-SA2

Applicable camera (model): 1 | 2/3 | 1/2 | **1/3** | **1/4**

10 x

Applicable to **1/3**

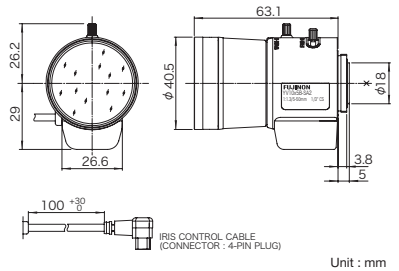

Vari-Focal: VARI | Wide Angle: WIDE | Telephoto Long Focal: TELE | DC Auto Iris: DC | CS Mount: CS-mt | Metal Mount: METAL | ND Filter: ND | Long Cable: 230 | Aspherical Lens: AT | Large Aperture Ratio: F1.3 | RoHS Compliant: RoHS

Focal Length (mm)			5 - 50(10x)
Iris Range			F1.3 - T360(Equivalent to F360)
Operation	Zoom		Manual
	Focus		Manual
	Iris		Auto (DC type)*1
Angle of View (H × V)	1/2"	WIDE	–
		TELE	–
	1/3"	WIDE	51° 59' × 39° 12'
		TELE	5° 24' × 4° 05'
	1/4"	WIDE	39° 12' × 29° 30'
		TELE	4° 05' × 3° 05'
Focus Range (From the Lens Front) (m)			∞ - 0.3
Mass (g)			100

*1 : The iris automatically closes when the camera is turned off.
※ Each of the above products is also available in long cable type (230 mm). ※ Each of the above products is also available in manual type.

For detailed specifications, see the following website: ▶http://www.fujifilm.com/products/optical_devices/cctv/security/